BEKO
COLOUR TELEVISIONS

L6B TFT- LCD TV

SERVICE MANUAL

CONTENTS	PAGES
Safety instructions	1
Technical specifications	2
Panel Specification	3
Back appearance of TV	5
Interconnectıon Diagram	5
Block diagram	6
Block diagram of power supply	7
Service mode	8
Service Mode items and values	10
Data sheet of important IC's and parts	11
Recommended Part List	23
Frequency list of channels	25

SAFETY PRECAUTIONS

GENERAL GUIDELINES

1. It is advised to insert an isolation transformer in the AC supply before servicing a hot chassis.
2. Always use the manufacturer's replacement safety components. The critical safety components marked with ⚠ on the schematics diagrams should not be by other substitutes. Other substitute may create the electrical shock , fire or other hazards. Take attention to replace the spacers with the originals. Furthermore where a short circuit has occurred , replace those components that indicate evidence of overheating.
3. After servicing , see that all the protective devices such as insulation barriers, insulation papers, shields and isolation R-C combinations are correctly installed.
4. When the receiver is not being used for a long time of period of time , unplug the power cord of the Adaptor from the AC outlet.

Color TFT LCD Module is very sensitive both electrically and physically.Users, therefore, are requested to follow the "Guidance of handling color TFT LCD Module"on the followings.

1 -Be careful not to make scratch on the polarizer.

Surface of polarizer is soft and can be physically damaged easily.Please do not touch, push or rub polarizer surface with materials over HB hardness.

2 - Keep clean the surface.

Please wear rubber glove when touch the surface of LCD screen. Please use soft and anti-static material as cleaner.

3 -Keep out of water. Water on/in the LCD may cause electrical short or corrosion. Please wipe out dry or water carefully.

4 -Prevent swift Temperature & Humidity change. Instantaneous temperature and/or humidity change can make dew or ice which cause nonconformance such as malfunction.

5 - High temperature & high humidity reduce the life-time.

LCD is not proper to be used at high temperature and high humidity. Please keep specified temperature and humidity condition.

6 - Keep out of Corrosive Gas. Corrosive gas effect the polarizer and the circuit chemically and cause defects accordingly.

7 - Electrostatic discharge can make Damage

There are electro-static sensitive components such as CMOS in LCD Module. Please earth human body when handle the LCD.In addition, please do not touch the interface connector pin with bare.

8 - Do not operate for a long time under the same pattern

Operating LCD for a long time under the same pattern can cause image persistence and can damage it. Please follow following guidance.

1. Turn the power off when do not use.
2. Change the pattern periodically.

LEAKAGE CURRENT COLD CHECK

1. Unplug the AC cord and connect a jumper between the two prongs of the plug.
2. Turn the receiver's power switch.
3. Measure the resistance value with an ohmmeter, between the jumpered AC plug and each exposed metallic cabinet part on the receiver. When the exposed metallic part a return path to the chassis the reading should be between 4Mohm and the 20Mohm. When the exposed metal does not have a return path to the chassis, the reading must be infinite.

LEAKAGE CURRENT HOT CHECK

1. Plug the AC cord directly in to the AC outlet. Do not use an isolation transformer for this check.
2. Connect a 2Kohm 10W resistor in series with an exposed metallic part on the receiver and an earth, such as a water pipe.
3. Use an AC voltmeter with high impedance to measure the potential across the resistor.
4. Check each exposed metallic part and check the voltage at the each point.
5. Reverse the AC plug at the outlet and repeat each of the above measurements.
6. The potential at the any point should not exceed 1.4 Vrms. In case a measurement is outside the limits specified , there is the possibility of a shock hazard , and the receiver should be repaired and rechecked before it is returned to the customer.

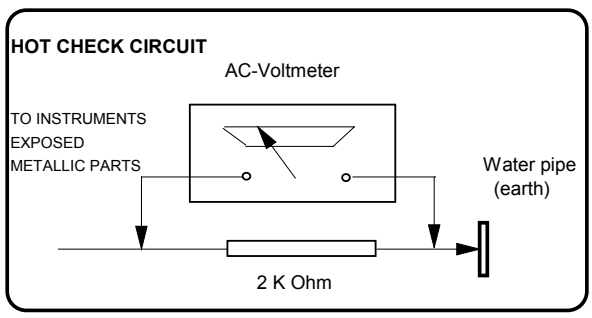

L6B TECHNICAL SPECIFICATION

Receiving System		PAL B/G+I+D/K SECAM L/L'
Comb Filter		Adaptive 4H\2H
LTI, CTI Filters		+
DVI Receiver	**DVI 1.0 Compliant**	+
	Resolution	VGA to SXGA
	2 Pixel \ Clk Support	+
Gamma Correction		8 to 10-bit LUT
PIP\PAP\POP\PAT		+
OSD		Graphics Based 8-bit\pixel
Teletext	**Level (1.5, 2.5, Teleweb)**	Teletext 1.5
	Type (Fast\Top\Simple)	Simple, Fast, Top
	Page Memory	800p
WSS		+
VPS\PDC		+
Picture Formats (4:3, 16:9, 14:9, Panorama, LetterBox, Subtitle)	**4:3**	+
	16:9	+
	14:9	+
	Panorama	+
	Letterbox	+
	Subtitle	+
	Zoom	+
WSS (Wide Screen Signalling)		+
ATS (Automatic Tuning System)		Frequency Search
Manual Search		Channel Table Search
Number of Program Storage		+
No Ident Timer		+
Picture Freeze		+
Equalizer		+
AVL (Automatic Volume Level)		+
Sound Status Memory		+
Picture Status Memory		+
Swap		+
Child Lock		+
Program Lock		+
Picture Format Switching Tru Pin 8		+
Auto RGB Detect Tru Pin 16		+
Timer	**Off Timer (Sleep Timer)**	+
	On Timer	+
Picture Smart (User, Soft, Natural, Rich)		+
Sound Smart (User, Music, Sports, Cinema, Speech)		+
Scart2 Out Selectable		+
S-Video Input Through Scart2		+
Audio Output Power RMS in Max at 10% THD)		2x5W for 22"W, 23"W 2x10W for 26"W 2x10W for 30"W
Stereo (German A2, Nicam, BTSC)		German A2, Nicam
S-video In (DIN)	1	
AV In (3 RCA)	1	
AV Out (3 RCA)	1	
PC Audio (L, R)	1	
D-Sub 15	1	
Headphone	1	
CVBS In	4	
Y\C In	1	
DVI In	YES	
CVBS Out	4	

PANEL SPECIFICATION

Sizes	22"	23"	26"	27"	30"	32"
Manufacturer	**Samsung**	**Samsung LG-Philips Hannstar**	**Samsung LG-Philips AUO**	**Chimei**	**Chimei AUO LG-Philips**	
Interface	Single LVDS	Single LVDS	Singlel LVDS	Singel LVDS	Single LVDS	Single LVDS
Resolution	WXGA (1280x720)	WXGA (1280x768)	WXGA (1280x768)	WXGA (1280x720)	WXGA (1280x768)	WXGA (1280x768)
Brightness (cd/m2)>=	450	450	450	550	550	450
Contrast>=	500	400	400	600	600	700
Response Time (Tr+Tf) msec =<	25	25	25	25	25	23
Viewing Angle R\L\H\L>=	85/85 85/85	85/85 85/85	85/85/85/85	85/85/85/85	85/85/85/85	85/85/85/85
Adaptor İnput	15V	24V	Built-in TV	Built-in TV	Built-in TV	Built-in TV
PoweR consumptions	100W	100W	120W	120W	140W	180W
St-By Power Consumption	<4W	<4W	<4W	<4W	<4W	<4W
Input Range	100V-240V/50- 60Hz	100V-240V/50- 60Hz	100V-240V/50- 60Hz	100V-240V/50- 60Hz	100V-240V/50- 60Hz	100V-240V/50- 60Hz

BACK SIDE APPEARANCES

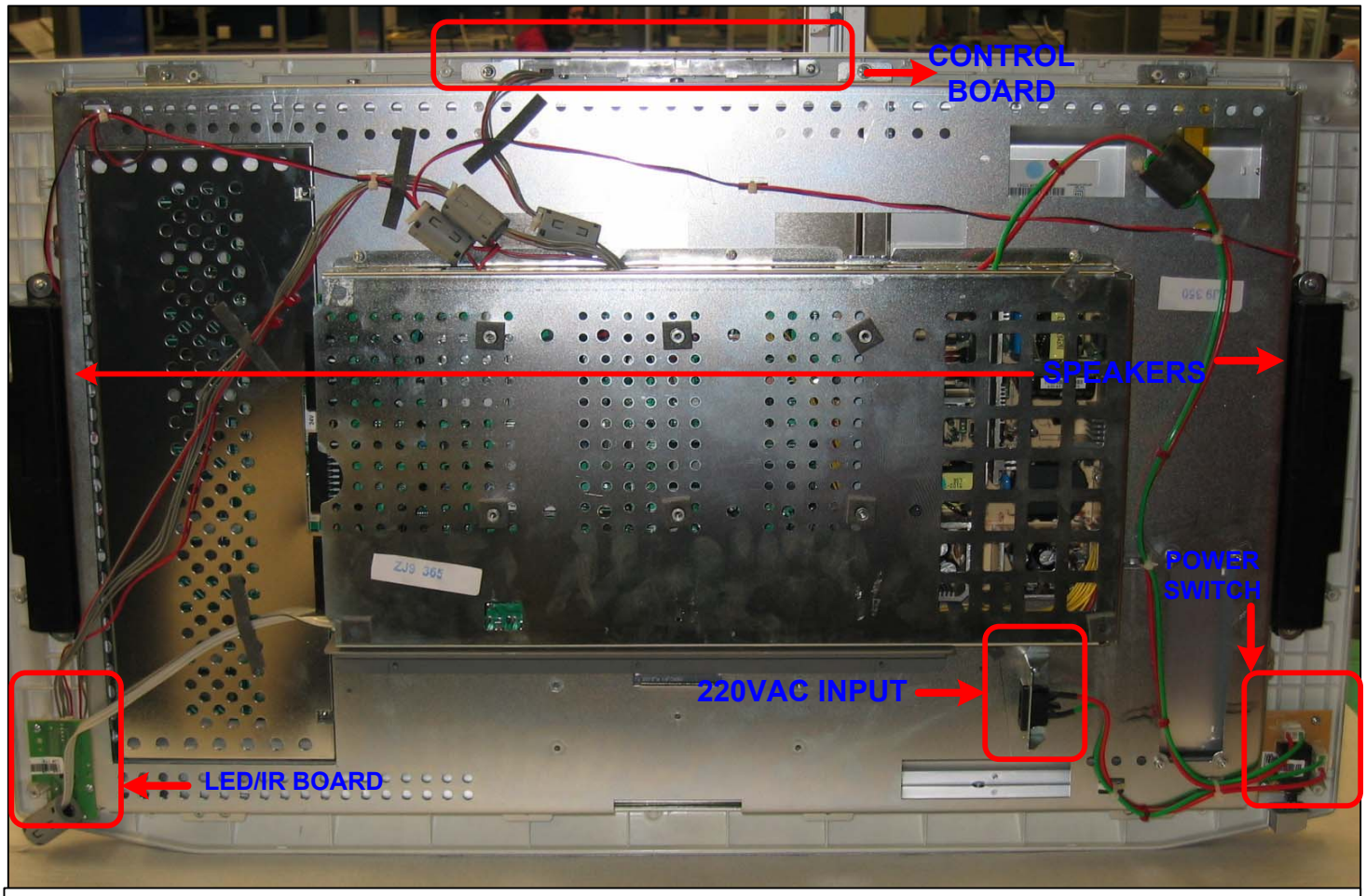

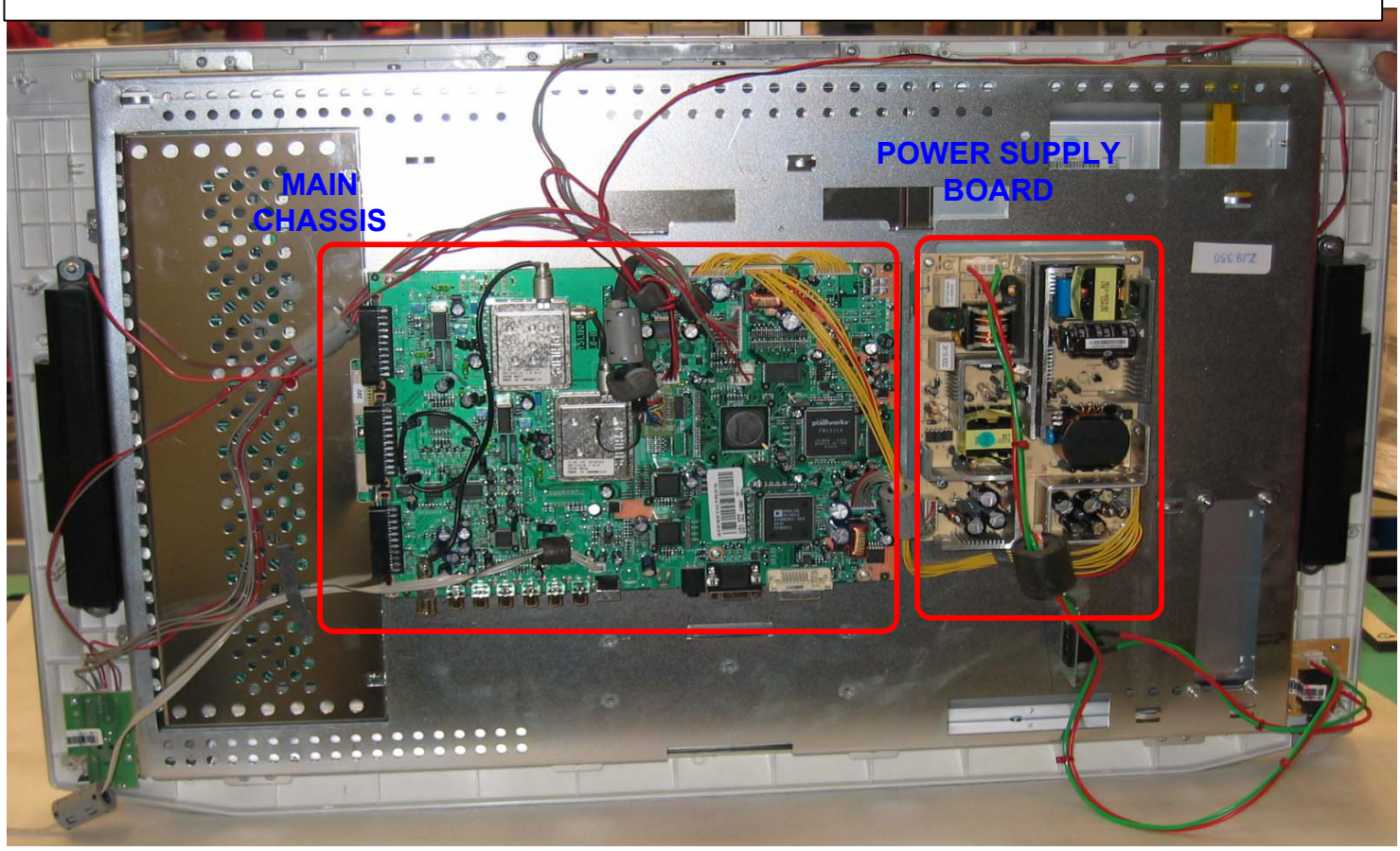

NOTE: LOCATION AND THE SHAPE OF IR /LED BAORD, CONTROL BOARD AND MAIN SWITCH BOARD MAY CHANGE ACCORDING TO THE COSMETIC OF THE TV AND SIZE

L6B CONNECTION DIAGRAM

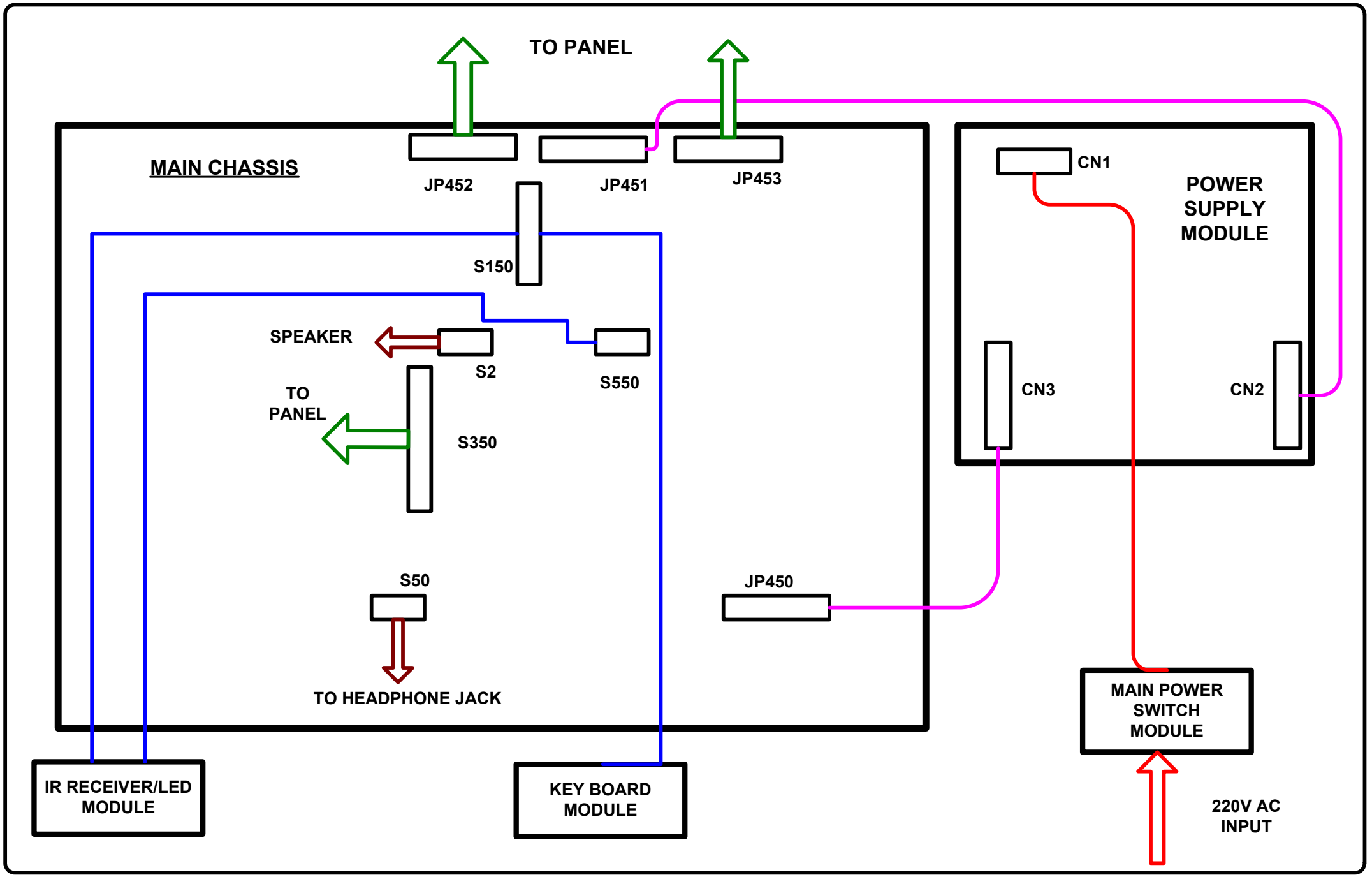

L6B BLOCK DIAGRAM

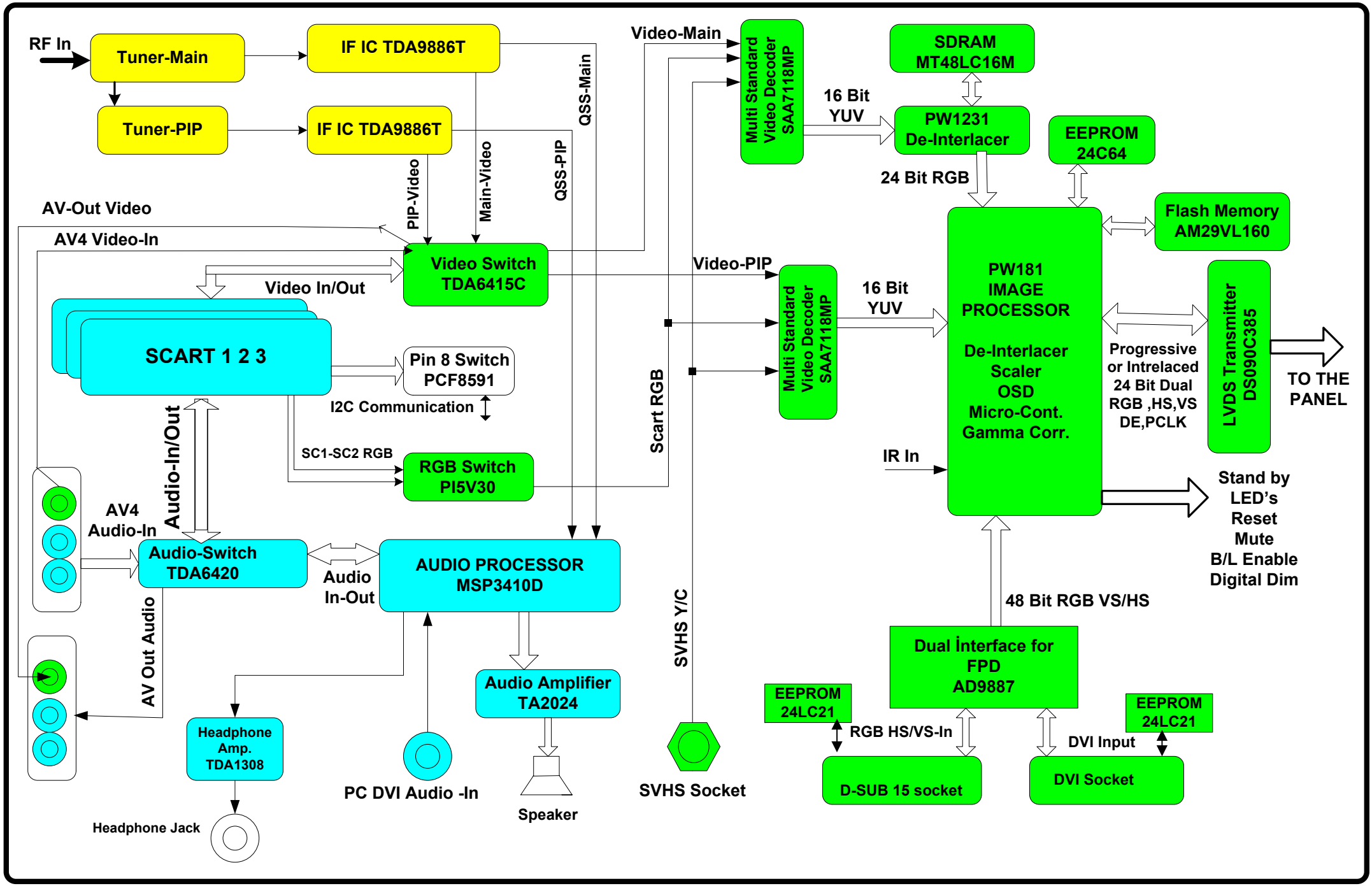

L6B POWER SUPPLY BLOCK DIAGRAM (MAIN CHASSIS)

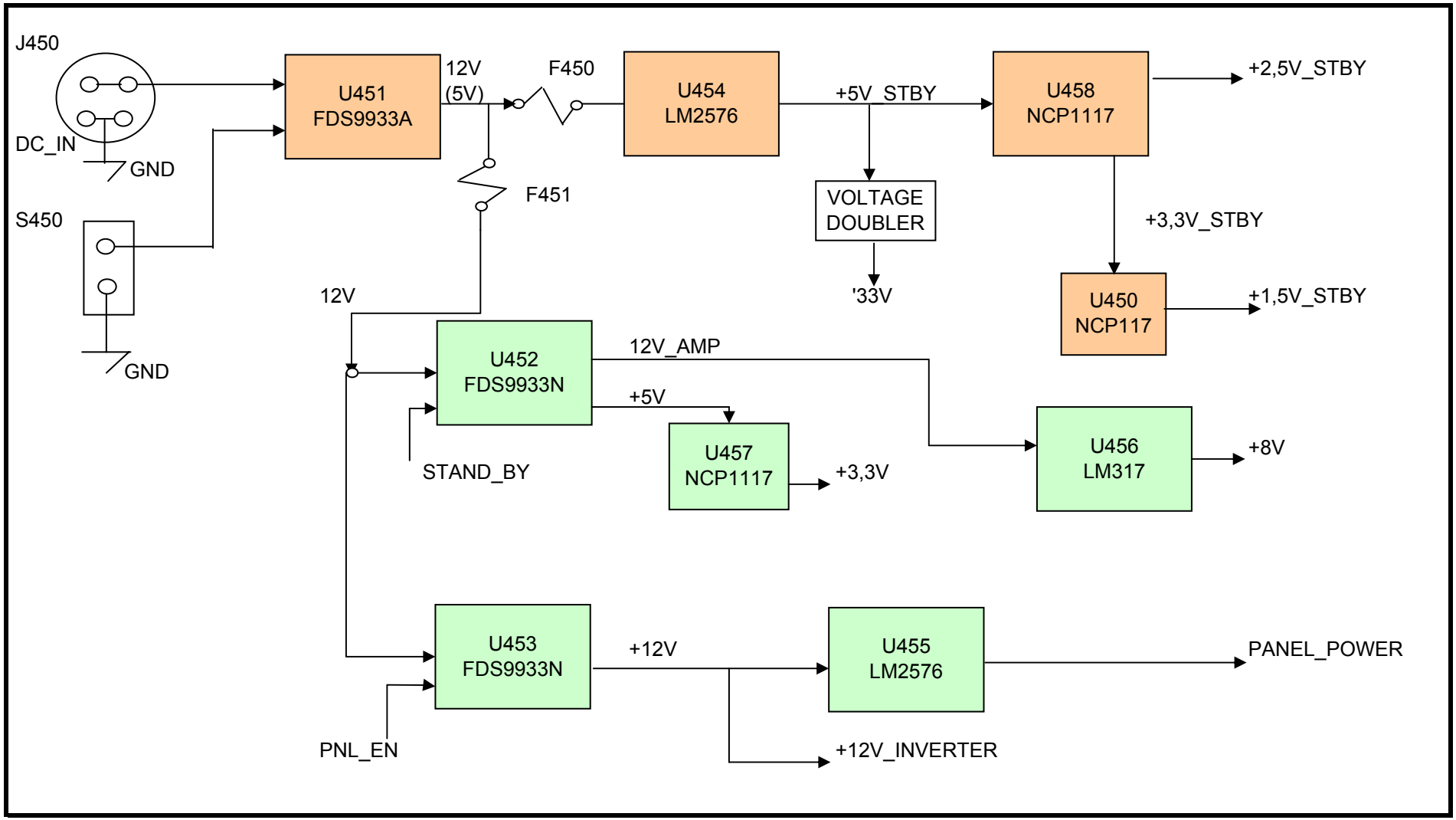

L6B SERVICE MENU

1. Activating the Service Menu

When the menu is on the screen press ‘9’, ‘3’, ’0’, ’1’ on the remote controller. This will activate the service menu.

2. Service Menu Structure

The service menu has three items: display, calibre and version

2.1 Display

Display item has seven options:

a- Panel
Panel option gives information about the current panel resolution. It is a read only option and can not be set.

b- Power on time
Power on time gives information about the last update time of the SW running. It is a read only option and can not be set.

c- Backlight on time
Backlight on time option reserved.

d- Scart prescale
Scart prescale option sets the prescale values for the input sounds entering the scart input of the MSP(Micronas Sound Processor). Changing this value you can adjust the level of the output sound going to loudspeakers for all the sources except the Tuners. The range is between 0 and 100.

e- nicam prescale
Nicam prescale option sets the prescale values for the Nicam standard sounds for tuner inputs. Changing this value you can adjust the level of the output sound going to loudspeakers for Nicam sounds entering the analog sound input of MSP. The range is between 0 and 100.

f- fm/am prescale
fm/am prescale option sets the prescale values for the FM/AM standard sounds for tuner inputs. Changing this value you can adjust the level of the output sound going to loudspeakers for FM/AM sounds entering the analog sound input of MSP. The range is between 0 and 100.

g- Agc(Automatic Gain Control) adjust
Agc adjust option sets the input voltage going to IF decoder AGC pin. Changing this value you can adjust this voltage for optimum Tuner performance. The range is between 0 and 31.

h- R/G/B Brightness/Contrast: These are used for color bias adjustment. The range is Between 0 and 255

2.2 Calibre

Calibre item has nine options:

a- video format
Video format option force the video format to the desired format. Selectable formats are Auto, Pal, NTSC and SECAM.

b- colorspace
Colorspace option gives the information about the video input colorspace input to PW181 IC. Do not change this value unless an error occurred in the colors displayed.

c- test pattern
This option activates the internal pattern of PW181 IC. There are 3 choices: none, vert bars, solid color. None will deactivate the internal pattern. Vert bars choice activates the bar pattern for the selected color component. Solid color activates the solid pattern with one color selected in color component and also you can change the level of the color by solid field level.

d- Color components:
This option selects the color for the internal pattern of PW181 IC. There are 4 choices: all, red, green and blue. If you choose all, you can see the white pattern and if you choose one of the other choices you can see the test pattern with the selected color.

e- solid field level
This option will adjust the level of the colors for the test pattern. The range is betwwen 1 and 64.

f- Initial ATS
This option will enable or disable the Initial setup for the TV. Setting this option to On, the TV will open from the Quick setup menu. Setting this option to Off will disable this option.

g- factory reset
Factory reset option executes a reset operation for the NVRAM. Pressing OK when this option is selected will erase the NVRAM and load default values to NVRAM.

h- dpms
This option selects the Power option for the TV. Setting this option to On the TV will switch to the last state for power on transition. Setting this to Off will disable this option and the TV will always switch to Stand-by state while power on transition.

i- osd timeout
This option sets the OSD timeout for the main menu structure. Selections are 5, 15 and 60 secs. The default is 60 sec.

2.3 Version

This item gives the information about the version of the software. Also you can see the last modified time for the GUI(graphical user interface).

L6 CHASSIS SERVICE MODE ITEMS

display menu

ITEM	TYPICAL VALUES/OPTIONS
panel	1280x768
power on time	03:39:45
back light time	03:39:45
scart prescale	25
nicam prescale	45
fm/am prescale	24
agc adjust	16
red brightness	128
red contrast	128
green brightness	128
green contrast	128
blue brightness	128
blue contrast	128

calibre menu

ITEM	TYPICAL VALUES/OPTIONS
video format	auto
color space	RGB
test pattern	none
color components	all
solid field level	33
initial ats	on
factory reset	press <ok> to reset
dpms	on
osd time out	60 sec

version

ITEM	TYPICAL VALUES/OPTIONS
Software	
	SL630T_CH1_T13 L6B 1.22 Chi30
GUI	
Project;	L6B Toshiba
Generated Date:	October 01,2004 at 22.42

SGS-THOMSON MICROELECTRONICS

TEA6415C

BUS-CONTROLLED VIDEO MATRIX SWITCH

- 20MHz BANDWIDTH
- CASCADABLE WITH ANOTHER TEA6415C (INTERNAL ADDRESS CAN BE CHANGED BY PIN 7 VOLTAGE)
- 8 INPUTS (CVBS, RGB, MAC, CHROMA, ...)
- 6 OUTPUTS
- POSSIBILITY OF MAC OR CHROMA SIGNAL FOR EACH INPUT BY SWITCHING-OFF THE CLAMP WITH AN EXTERNAL RESISTOR BRIDGE
- BUS CONTROLLED
- 6.5dB GAIN BETWEEN ANY INPUT AND OUTPUT
- -55dB CROSSTALK AT 5MHz
- FULLY ESD PROTECTED

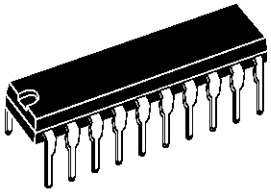

DIP20
(Plastic Package)

ORDER CODE : TEA6415C

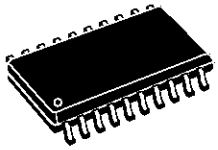

SO20
(Plastic Micropackage)

ORDER CODE : TEA6415CD

DESCRIPTION

The main function of the TEA6415C is to switch 8 video input sources on the 6 outputs.

Each output can be switched to only one of the inputs whereas but any same input may be connected to several outputs.

All the switching possibilities are controlled through the I^2C bus.

PIN CONNECTIONS

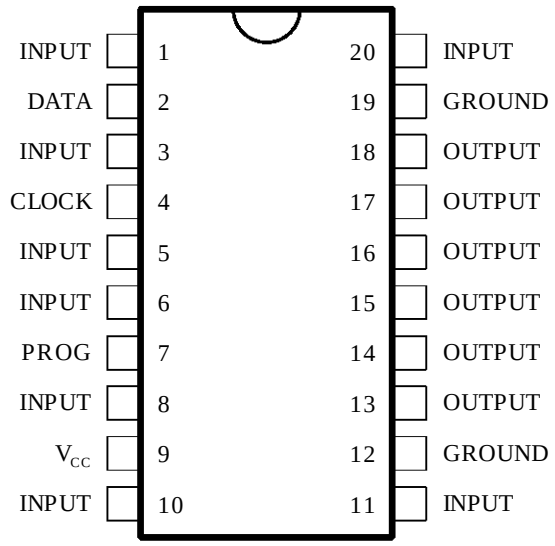

6415C-01.EPS

BLOCK DIAGRAM

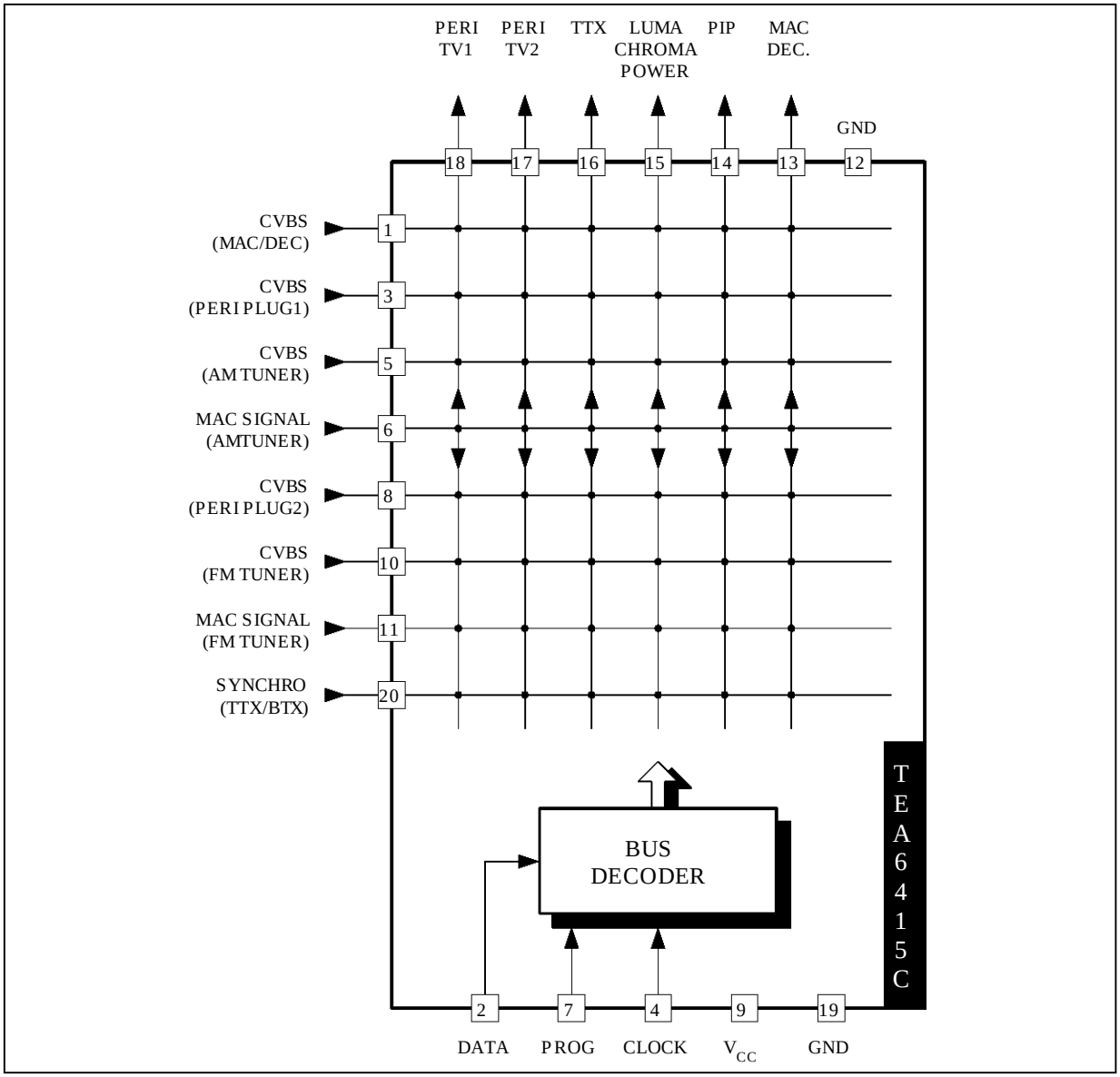

GENERAL DESCRIPTION

The main function of the IC is to switch 8 video input sources on 6 outputs.

Each output can be switched on only one of each input. On each input an alignment of the lowest level of the signal is made (bottom of synch. top for CVBS or black level for RGB signals).

Each nominal gain between any input and output is 6.5dB. For D2MAC or Chroma signal the alignment is switched off by forcing, with an external resistor bridge, 5 V_{DC} on the input. Each input can be used as a normal input or as a MAC or Chroma input (with external resistor bridge). All the switching possibilities are changed through the BUS.

Driving 75Ω load needs an external transistor.

It is possible to have the same input connected to several outputs.

The starting configuration upon power on (power supply : 0 to 10V) is undetermined.

In this case, 6 words of 16 bits are necessary to determine one configuration. In other case, 1 word of 16 bits is necessary to determine one configuration.

I²C-bus controlled single and multistandard alignment-free IF-PLL demodulators

1 FEATURES

- 5 V supply voltage
- Gain controlled wide-band Vision Intermediate Frequency (VIF) amplifier, AC-coupled
- Multistandard true synchronous demodulation with active carrier regeneration: very linear demodulation, good intermodulation figures, reduced harmonics, and excellent pulse response
- Gated phase detector for L and L-accent standard
- Fully integrated VIF Voltage Controlled Oscillator (VCO), alignment-free, frequencies switchable for all negative and positive modulated standards via I²C-bus
- Digital acquisition help, VIF frequencies of 33.4, 33.9, 38.0, 38.9, 45.75, and 58.75 MHz
- 4 MHz reference frequency input: signal from Phase-Locked Loop (PLL) tuning system or operating as crystal oscillator
- VIF Automatic Gain Control (AGC) detector for gain control, operating as peak sync detector for negative modulated signals and as a peak white detector for positive modulated signals
- External AGC setting via pin OP1
- Precise fully digital Automatic Frequency Control (AFC) detector with 4-bit digital-to-analog converter, AFC bits readable via I²C-bus
- TakeOver Point (TOP) adjustable via I²C-bus or alternatively with potentiometer
- Fully integrated sound carrier trap for 4.5, 5.5, 6.0, and 6.5 MHz, controlled by FM-PLL oscillator
- Sound IF (SIF) input for single reference Quasi Split Sound (QSS) mode, PLL controlled
- SIF-AGC for gain controlled SIF amplifier, single reference QSS mixer able to operate in high performance single reference QSS mode and in intercarrier mode, switchable via I²C-bus
- AM demodulator without extra reference circuit
- Alignment-free selective FM-PLL demodulator with high linearity and low noise
- I²C-bus control for all functions
- I²C-bus transceiver with pin programmable Module Address (MAD)
- Four I²C-bus addresses via MAD.

2 GENERAL DESCRIPTION

The TDA9885 is an alignment-free multistandard (PAL and NTSC) vision and sound IF signal PLL demodulator for negative modulation only and FM processing.

The TDA9886 is an alignment-free multistandard (PAL, SECAM and NTSC) vision and sound IF signal PLL demodulator for positive and negative modulation, including sound AM and FM processing.

3 APPLICATIONS

- TV, VTR, PC and STB applications.

4 ORDERING INFORMATION

TYPE NUMBER	PACKAGE		
	NAME	DESCRIPTION	VERSION
TDA9885T/V3	SO24	plastic small outline package; 24 leads; body width 7.5 mm	SOT137-1
TDA9885TS/V3	SSOP24	plastic shrink small outline package; 24 leads; body width 5.3 mm	SOT340-1
TDA9885HN/V3	HVQFN32	plastic, heatsink very thin quad flat package; no leads; 32 terminals; body $5 \times 5 \times 0.85$ mm	SOT617-1
TDA9886T/V3	SO24	plastic small outline package; 24 leads; body width 7.5 mm	SOT137-1
TDA9886TS/V3	SSOP24	plastic shrink small outline package; 24 leads; body width 5.3 mm	SOT340-1

6 BLOCK DIAGRAM

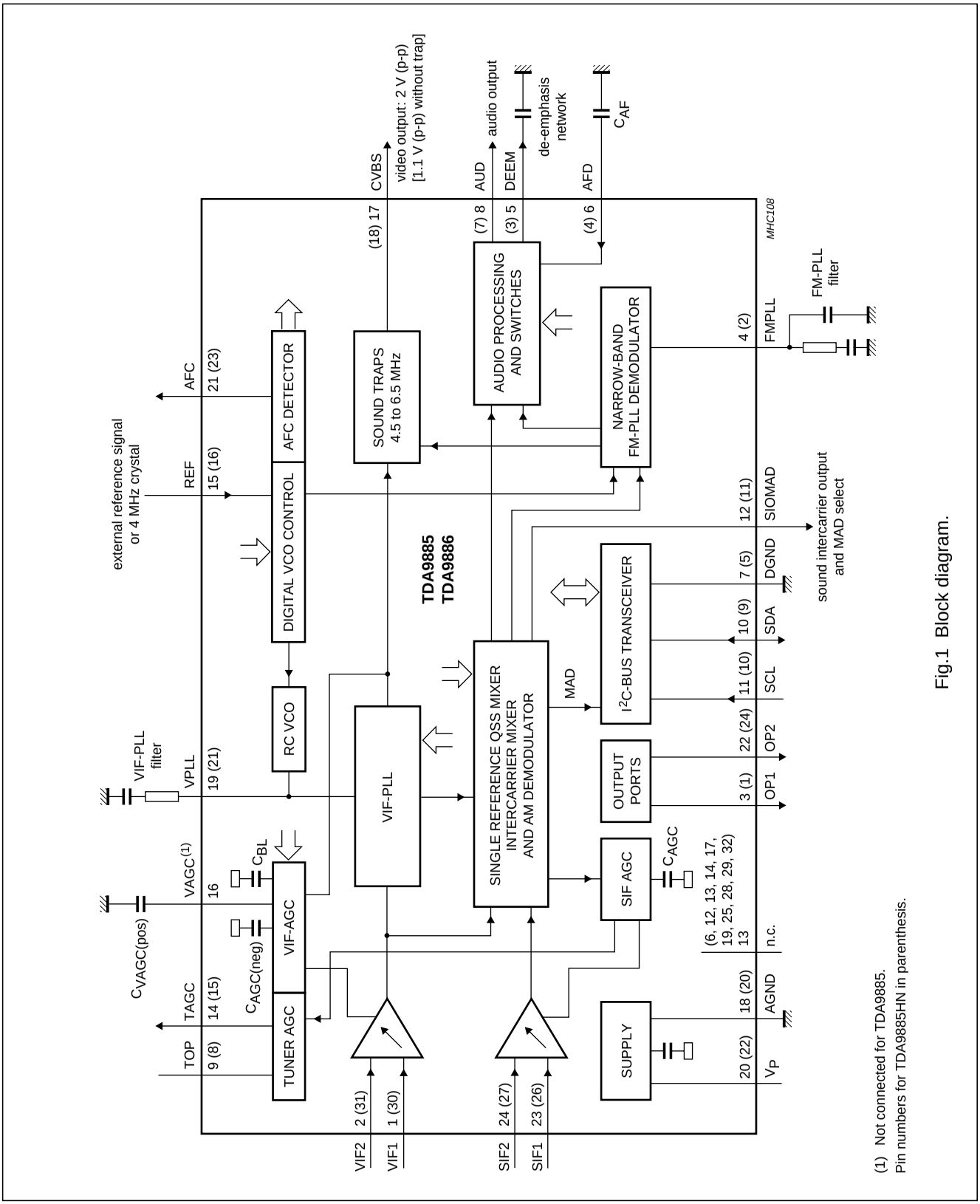

Fig.1 Block diagram.

(1) Not connected for TDA9885.
Pin numbers for TDA9885HN in parenthesis.

SGS-THOMSON MICROELECTRONICS

TEA6420

BUS-CONTROLLED AUDIO MATRIX

- 5 STEREO INPUTS
- 4 STEREO OUPUTS
- GAIN CONTROL 0/2/4/6dB/MUTE FOR EACH OUTPUT
- CASCADABLE (2 different addresses)
- SERIAL BUS CONTROLLED
- VERY LOW NOISE
- VERY LOW DISTORSION

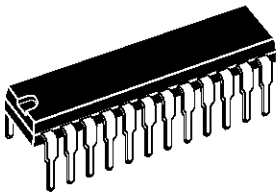

SHRINK24
(Plastic Package)

ORDER CODE : TEA6420

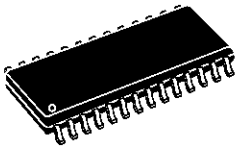

SO28
(Plastic Micropackage)

ORDER CODE : TEA6420D

DESCRIPTION

The TEA6420 switches 5 stereo audio inputs on 4 stereo outputs.

All the switching possibilities are changed through the I^2C bus.

PIN CONNECTIONS

SHRINK24

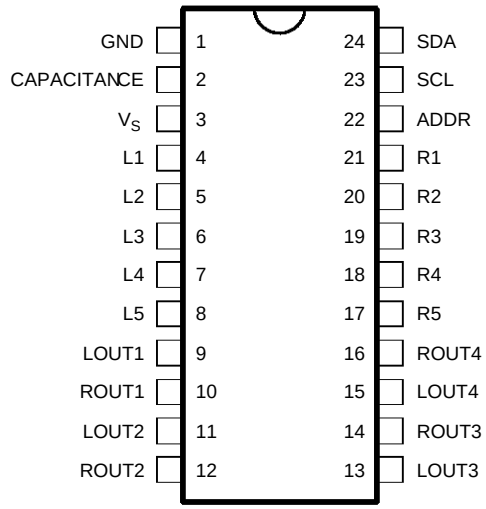

SO28

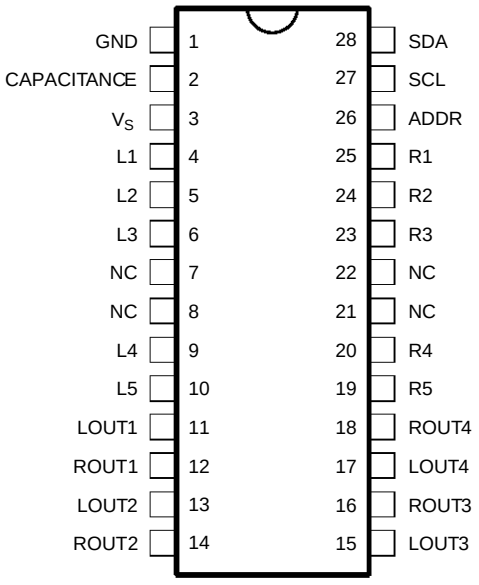

6420-01.EPS / 6420-02.EPS

BLOCK DIAGRAM

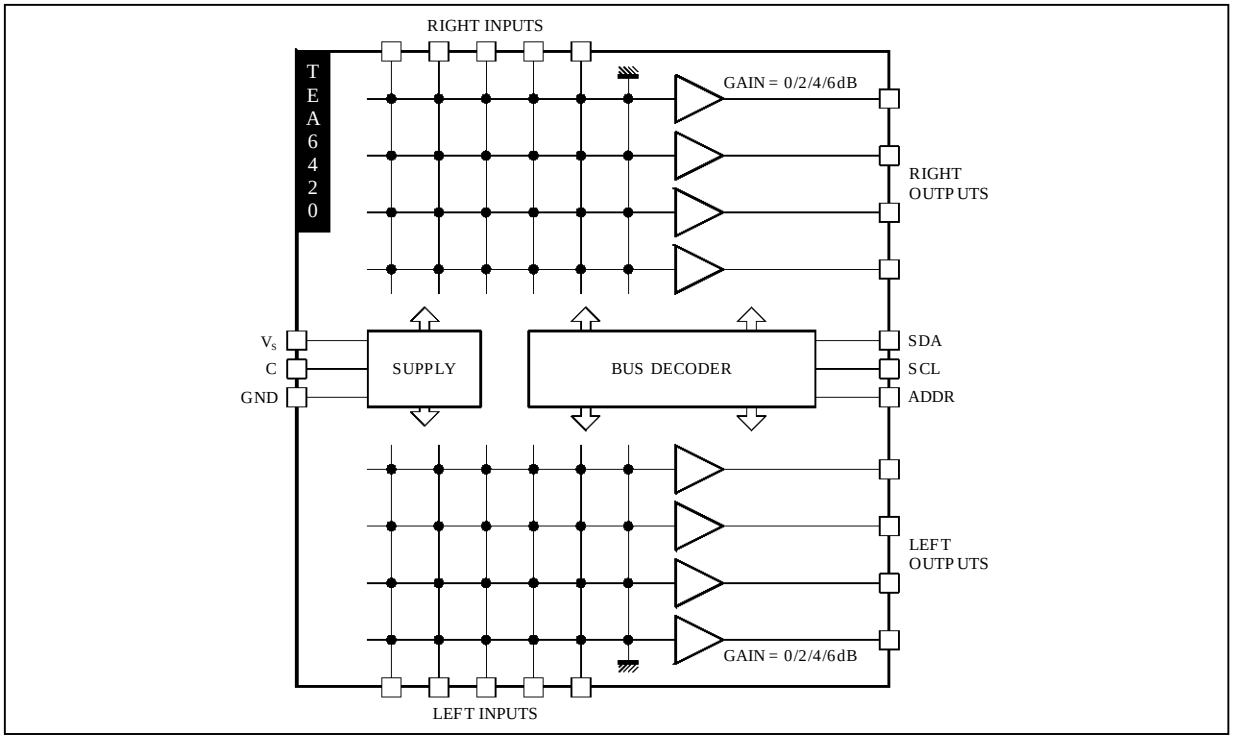

ABSOLUTE MAXIMUM RATINGS

Symbol	Parameter	Value	Unit
V_{CC}	Supply Voltage	10.2	V
T_{oper}	Operating Ambient Temperature	0, + 70	^oC
T_{stg}	Storage Temperature	- 20, + 150	^oC

6420-01.TBL

THERMAL DATA

Symbol	Parameter		Value	Unit
$R_{th(j-a)}$	Junction Ambient Thermal Resistance	SHRINK24 SO28	75 75	$^oC/W$

6420-02.TBL

ELECTRICAL CHARACTERISTICS

$T_A = 25^oC$, $V_S = 10V$, $R_L = 10k\Omega$, $R_G = 600\Omega$, f = 1kHz (unless otherwise specified)

Symbol	Parameter	Test Conditions		Min.	Typ.	Max.	Unit
SUPPLY							
V_S	Supply Voltage			8	9	10.2	V
I_S	Supply Current				5	8	mA
SVR	Ripple Rejection	$V_{IN} = 500mV_{RMS}$, BW = 20 - 20kHz		70	80		dB
MATRIX							
V_{IN}	Input DC Level			4.5	5	5.5	V
R_I	Input Resistance			30	50	100	kΩ
C_S	Channel Separation	$V_{IN} = 2V_{RMS}$ f = 1kHz	Gain = 0dB Gain = 6dB	80 70	90 82		dB dB

6420-03.TBL

PW1231

Product Specification

General

The PW1231 is a high-quality, digital video signal processor that incorporates Pixelworks' patented deinterlacing, scaling, and video enhancement algorithms. The PW1231 accepts industry-standard video formats and resolutions, and converts the input into any desired output format.The video algorithms are highly efficient, providing excellent quality video.

The PW1231 Video SignalProcessor combines many functions into a single device, including memory controller, auto-configuration, and others. This high level of integration enables simple, flexible, cost-effective solutions featuring fewer required components.

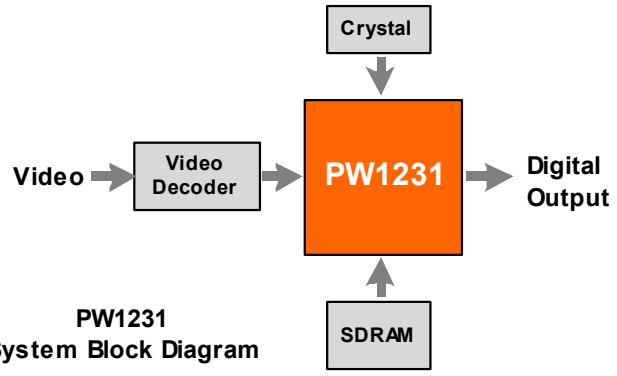

PW1231
System Block Diagram

Features

- Built-In Memory Controller
- Motion-Adaptive Deinterlace Processor
- Intelligent Edge Deinterlacing
- Digital Color/Luminance Transient Improvement (DCTI/DLTI)
- Interlaced Video Input Options, including NTSC and PAL
- Independent horizontal and vertical scaling
- Copy Protection
- Two-Wire Serial Interface

Applications:
For use with Digital Displays

- Flat-Panel (LCD, DLP) TVs
- Rear Projection TVs
- Plasma Displays
- LCD Multimedia Monitors
- Multimedia Projectors

Device	Application	Package
PW1231 PW1231-L	Up to XGA	160-pin PQF

NOTE: "L" denotes lead (Pb) free

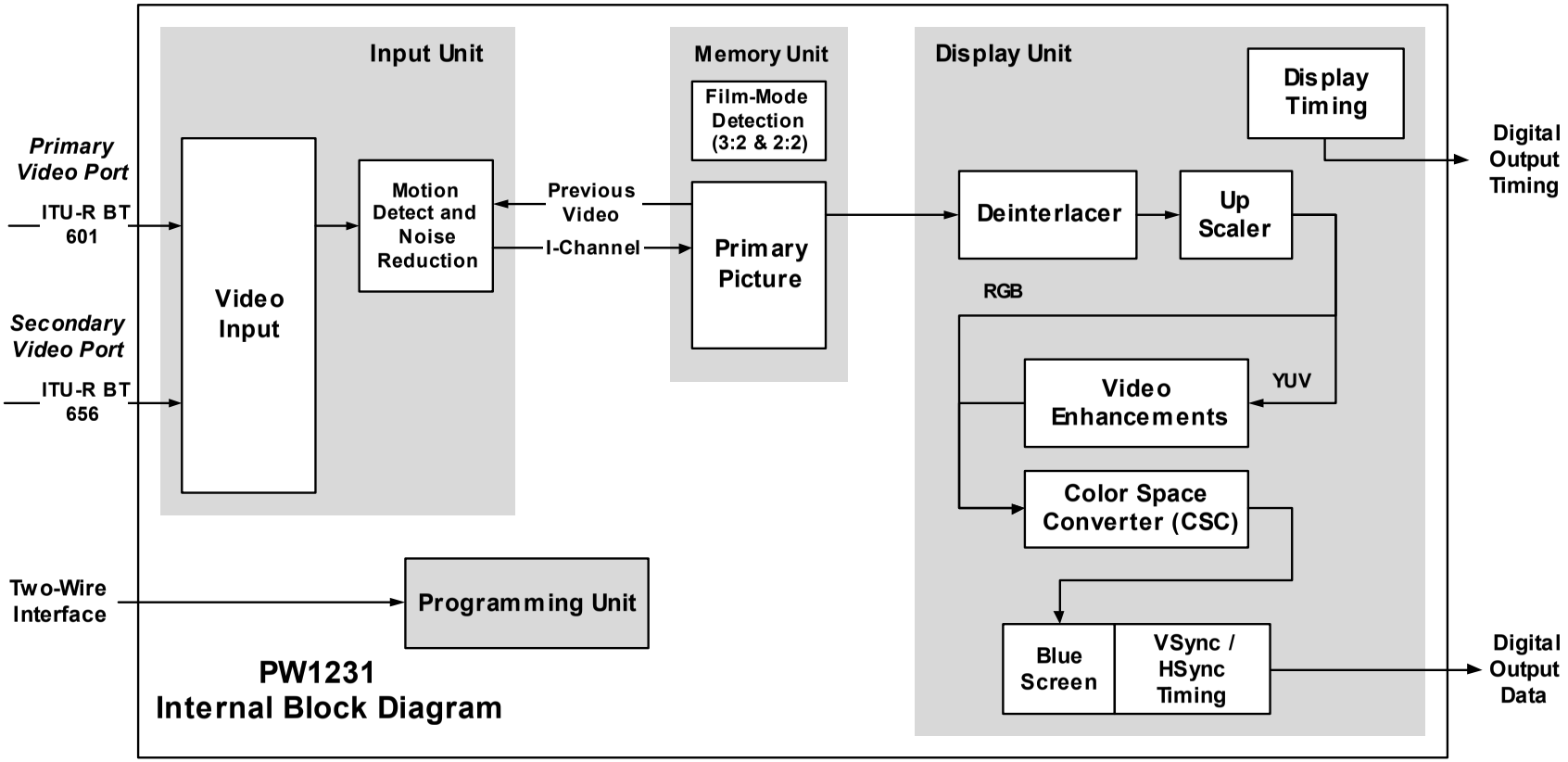

Figure 1-1 Internal Block Diagram

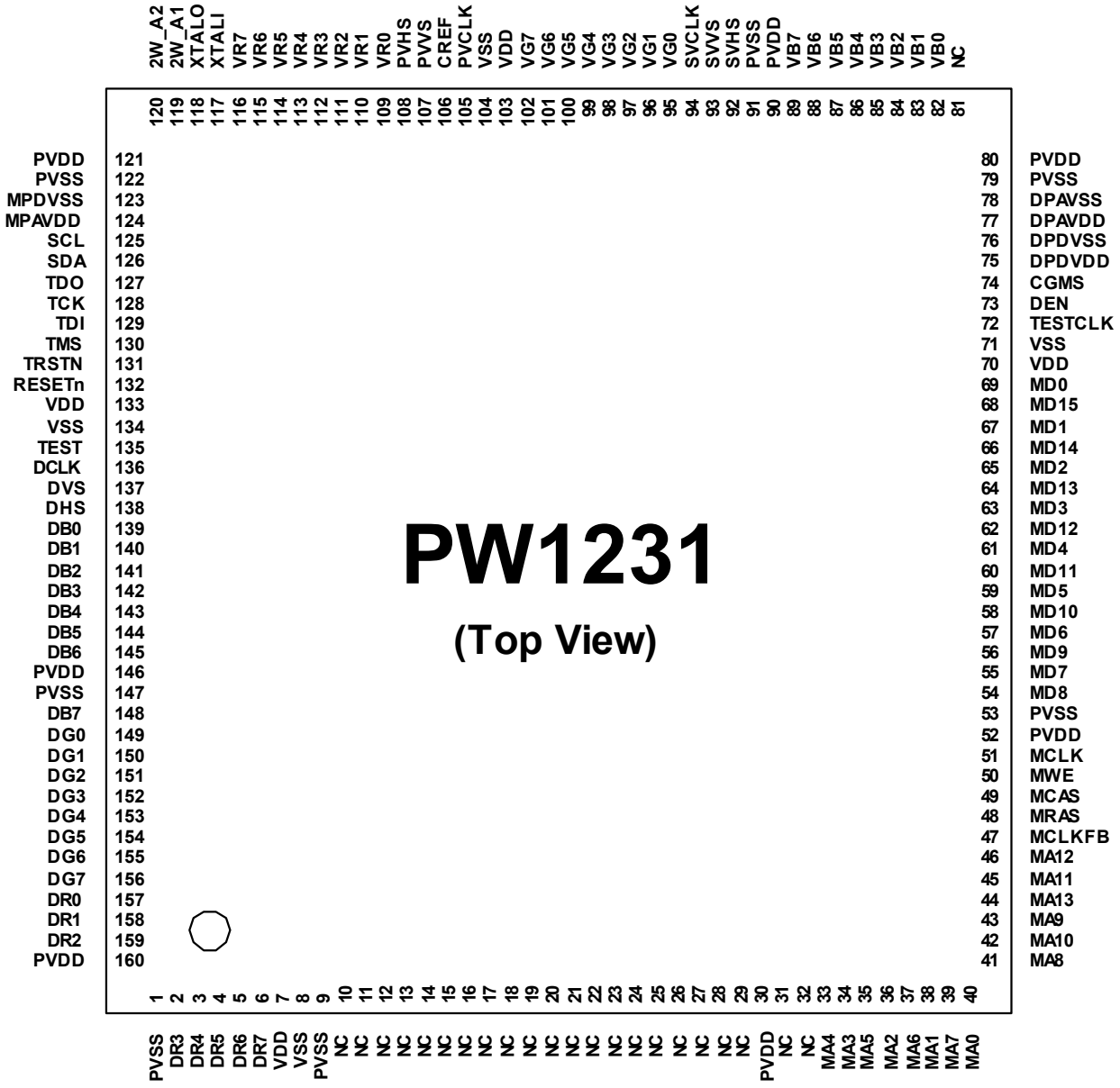

Figure 2-1 PW1231 Pin Layout

PW181

Product Specification

General Description

The PW181 ImageProcessor is a highly integrated "system-on-a-chip" that interfaces computer graphics and video inputs in virtually any format to a fixed-frequency flat panel display.

Computer and video images from NTSC/PAL to WUXGA at virtually any refresh rate can be resized to fit on a fixed-frequency target display device with any resolution up to WUXGA. Video data from 4:3 aspect ratio NTSC or PAL and 16:9 aspect ratio HDTV or SDTV is supported. Multi-region, nonlinear scaling allows these inputs to be resized optimally for the native resolution of the display.

Advanced scaling techniques are supported, such as format conversion using multiple programmable regions. Three independent image scalers coupled with frame locking circuitry and dual programmable color lookup tables create sharp images in multiple windows, without user intervention.

Embedded SDRAM frame buffers and memory controllers perform frame rate conversion and enhanced video processing completely on-chip. A separate memory is dedicated to storage of on-screen display images and CPU general purpose use.

Advanced video processing techniques are supported using the internal frame buffer, including motion adaptive, temporal deinterlacing with film mode detection. When used in combination with the new third-generation scaler, this advanced video processing technology delivers the highest quality video for advanced displays.

Both input ports support integrated DVI 1.0 content protection using standard DVI receivers.

A new advanced OSD Generator with more colors and larger sizes supports more demanding OSD applications, such as on-screen programming guides. When coupled with the new, faster, integrated microprocessor, this OSD Generator supports advanced OSD animation techniques.

Programmable features include the user interface, custom start-up screen, all automatic imaging features, and special screen effects.

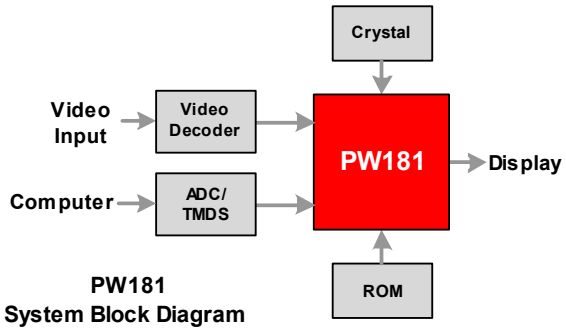

PW181
System Block Diagram

Features

- Third-generation, two-dimensional filtering techniques
- Third-generation, advanced scaling techniques
- Second-generation Automatic Image Optimization
- Frame rate conversion
- Video processing
- On-Screen Display (OSD)
- On-chip microprocessor
- JTAG debugger and boundary scan
- Picture-in-picture (PIP)
- Multi-region, non-linear scaling
- Hardware 2-wire serial bus support

Applications

- Multimedia Displays
- Plasma Displays
- Digital Television

Device	Application	Package
PW181-10V	Up to XGA Displays	352 PBGA
PW181-20V	Up to UXGA Displays	
PW181-30V	Up to WUXGA Display	

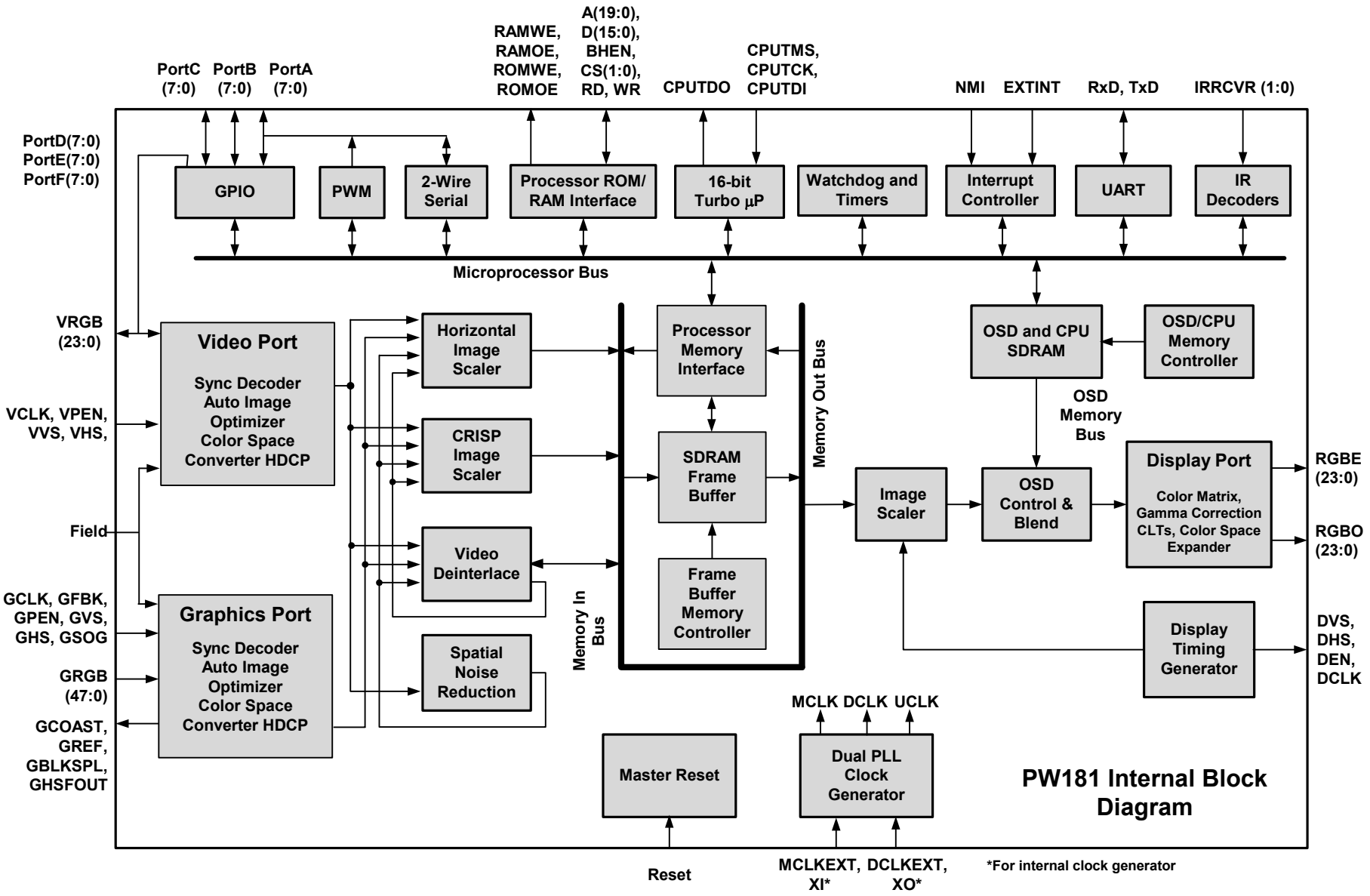

Figure 1-1 Internal Block Diagram

L6B RECOMMEDED SPARE PARTS

POSITION	PART NUMBER	PART DESCRIPTION
	056T27-CH1	LCD CHIMEI V270W1-L04 (LCD TV)
	056T30-CH1	LCD CHI-MEI V296W1-L14 (LCD TV) 30")
	056W26-LP2	LCD LG-PHILIPS LC260W01-A5K6 (LCD TV)
	L38172	CU ASSY 30" L6B (ZR1192-21)
	L57172	CU ASSY 27" L6B (ZR1192-21)
	UR3110	L6B CHASIS 27"TOS MS/NX/3/SK/PIP/PEN/DVI
	US1110	L6B CHASIS TOS 30" M/NX/3/SK/PIP/PEN/DVI
	US1172	CU ASSY 30" L6BL38 TOSHIBA (ZR1191-20)
	Y23172	CU ASSY 26L6L43 L6B VER.(ZP9191-20)
	Y22172	CU ASSY 26L6BL44 (ZG5192-20)
	Y51120	L6 CHASIS DAUGHTER BOARD
	ZG4187F	RC L6B TOSHIBA GRI/SHINE SI.P.ED CT-870
	JX1187	R/C L6B REMOTE CONTROL JAECS SIL.GRUNDIG
	ZG4301	TERMINAL BATT.BOX(+-) R/C TOSHIBA
	ZJ9172	POWER SWITCH ASSY 27/30" L6B(ZJ9192-20)
	ZJ9205F	BACK COVER 30" L38 LCD TV SILVER L6B
	ZJ9206F	SCART BACK COVER 30L38 LCD TV SILVER
	ZJ9251F	FRONT COVER G.BL/BUR.SIL P.ED 30L38 TOS.
	ZJ9805	CUSHION LEFT 30" LCD TV
	ZJ9806	CUSHION RIGHT 30" LCD TV
	ZR1107-AS	SPEAKER 10W 4R PALSTIC CASE KAB MOUNTED
	ZR1172	CU ASSY 27" L6BL57 TOSHIBA (ZR1191-20)
	ZR1204F	LENS IR/LED 30"L38 LCD TV
	ZR1205F	BACK COVER 27" L57 LCD TV SILVER L6B
	ZR1208F	KNOB POWER 27"L57 LCD TV SILVER
	ZR1212F	KNOB PROGRAM/VOL. 27LCD TOSHIBA SILVER
	ZR1251F	FRONT COVER G.BL./BUR.SIL P.ED 27L57 TOS
	ZR1255	BACK COVER DARK GRAY P.ED 27L6BL57 LCD
	ZR1258	POWER KNOB BURNISH SILVER PAINTED 27"L57
	ZR1805	CUSHION LEFT 30" LCD TV
	ZR1806	CUSHION RIGHT 27" LCD TV
	ZR1910	ADAPTOR SPS 180W 24/5 12/5 PFC 2PIN(LISH
AV/TV	010844	TACT SWITCH 2 LEG (MTSB)
CN250	031383	CON.DVI 24+5POL JRX1-DV124+5
CN601	ZJ9512-AS	CABLE PANEL.INTERFACE 30"L6B CHI 30.LU
	303407	LED ROT LTL 4221N P6 GREEN
	303447	LED 3MM RED-BLUE LIGITEK LSRFSBK2092
F450	054290	FUSE 5.0A 250V ROUND
F451	054290	FUSE 5.0A 250V ROUND
IR1	452521-01	IR RECEIVER TSOP34838 SS1A
J19	031508	KONN. RF IEC TO RCA
J53	031477	KONN. CINCH .... WHITE HOR.12,5MM 30L6
J56	031478	KONN. CINCH ..... RED HOR.12,5MM 30L6
J57	031423	HEADPHONE JACK YKB21-5103
J832	031479	KONN. CINCH ... YELLOW HOR.12,5MM 30L6
J926	031795	KONN.S-VHS
MENU	010844	TACT SWITCH 2 LEG (MTSB)
P250	031358	CONN. VGA B10B
SAW825	056708	SAW FILTER OFW K3958M
SAW826	056708	SAW FILTER OFW K3958M
SAW827	056010	SAW FILTER OFW K9656M

SAW828	056010	SAW FILTER OFW K9656M
SW1	010861	ON/OFF SWITCH BK98
TU825	Y51136-PH1	TUNER PH UV1316T/SIGH-3 SPL ASIMTRK YAT
TU826	Y11136	TUNER HOR.PHILLIPS UV1316/A I H-4
U1	453124	IC-CHIP NCP1117DT33RK TO-252 PACKAGE
U150	453195	IC PI5V330W SOIC(W)
U151	453350	IC-CHIP PCF8591 /SO16
U2	453262	IC-CHIP AD9887KS-100- DUAL IN.FACE TRAY
U250	453261	IC-CHIP 24LC21A-I/SN-CMOS18K/2.5V SE.T&R
U251	453261	IC-CHIP 24LC21A-I/SN-CMOS18K/2.5V SE.T&R
U3	453494	IC-CHIP TRIPATH TA2024 STEREO CLAS-D T&R
U350	453921	IC-CHIP DS90C385A MTD56
U351	452997	IC LM358DR2 / S08
U400	453233	IC-CHIP AM29LV160DB-90EC (TRAY)TSOP48
U401	453263	IC-CHIP AT24C64N-10SI-2. - SO8 TAPE&REEL
U402	453349	IC-CHIP TLC7733 /SO8
U450	453095	IC-CHIP NCP1117DTARK (DPAK)(T&R) TO252
U452	401372	TRN FDS9933A
U454	453294	IC-CHIP LM2576D2TR4-005V 3A TO263 STPT&R
U455	453294	IC-CHIP LM2576D2TR4-005V 3A TO263 STPT&R
U456	453428	IC-CHIP LM317MDT VAR.VOLT.REG. TO-252
U457	453124	IC-CHIP NCP1117DT33RK TO-252 PACKAGE
U458	453124	IC-CHIP NCP1117DT33RK TO-252 PACKAGE
U50	452706	IC TDA1308T/N1 SO-G8 (T&R)
U51	453352	IC-CHIP MSP3410-MQFP64
U52	453351	IC TEA6420 /SO28
U650	453346	IC-CHIP PW1231A
U750	452863	IC MT48LC4M16A2-7E SDRAM 54PIN TSOP
U825	451569	IC-CHIP TDA9886T/V3 118(SO24) T&R
U826	451569	IC-CHIP TDA9886T/V3 118(SO24) T&R
U827	453271	IC-CHIP TEA6415CDT -VIDEO-MAT-SW.T&R
U925	453124	IC-CHIP NCP1117DT33RK TO-252 PACKAGE
X941	8R9185	HP JACK 17"LCD TV
Y300	056753	CRYSTALL 24.576MHZ 20PF 30PPM
Y50	056952	CRYSTAL 18.432MHZ +-30PPM
Y550	056119	CRYSTAL 14.31818MHz CL=18PF30/30PPMHC49U
Y650	056121	CRYSTAL 10 MHz / HC49U 20PF 30PPM
Y825	056013	CRYSTAL 4 MHZ HC49-U
Y826	056013	CRYSTAL 4 MHZ HC49-U
Y925	056753	CRYSTALL 24.576MHZ 20PF 30PPM

FREQUENCY TABLE (MHz)

Channel	Number	BG	I	DK	L/L'
CH	1		49.75	49.75	47.75
CH	2	48.25	59.25	59.25	55.75
CH	3	55.25	77.25	77.25	60.50
CH	4	62.25	85.25	85.25	63.75
CH	5	175.25	93.25	93.25	176.00
CH	6	182.25	175.25	175.25	184.00
CH	7	189.25	183.25	183.25	192.00
CH	8	196.25	191.25	191.25	200.00
CH	9	203.25	199.25	199.25	208.00
CH	10	210.25	207.25	207.25	216.00
CH	11	217.25	215.25	215.25	189.25
CH	12	224.25	223.25	223.25	182.25
CH	13	53.75	45.75		196.25
CH	14	62.25	53.75		210.25
CH	15	82.25	61.75		
CH	16	175.25	69.75		
CH	17	183.25	95.25		
CH	18	192.25			
CH	19	201.25			
CH	20	210.25			
CH	21	471.25	471.25	471.25	471.25
CH	22	479.25	479.25	479.25	479.25
CH	23	487.25	487.25	487.25	487.25
CH	24	495.25	495.25	495.25	495.25
CH	25	503.25	503.25	503.25	503.25
CH	26	511.25	511.25	511.25	511.25
CH	27	519.25	519.25	519.25	519.25
CH	28	527.25	527.25	527.25	527.25
CH	29	535.25	535.25	535.25	535.25
CH	30	543.25	543.25	543.25	543.25
CH	31	551.25	551.25	551.25	551.25
CH	32	559.25	559.25	559.25	559.25
CH	33	567.25	567.25	567.25	567.25
CH	34	575.25	575.25	575.25	575.25
CH	35	583.25	583.25	583.25	583.25
CH	36	591.25	591.25	591.25	591.25
CH	37	599.25	599.25	599.25	599.25
CH	38	607.25	607.25	607.25	607.25
CH	39	615.25	615.25	615.25	615.25
CH	40	623.25	623.25	623.25	623.25
CH	41	631.25	631.25	631.25	631.25
CH	42	639.25	639.25	639.25	639.25
CH	43	647.25	647.25	647.25	647.25
CH	44	655.25	655.25	655.25	655.25

Channel	Number	BG	I	DK	L/L'
CH	45	663.25	663.25	663.25	663.25
CH	46	671.25	671.25	671.25	671.25
CH	47	679.25	679.25	679.25	679.25
CH	48	687.25	687.25	687.25	687.25
CH	49	695.25	695.25	695.25	695.25
CH	50	703.25	703.25	703.25	703.25
CH	51	711.25	711.25	711.25	711.25
CH	52	719.25	719.25	719.25	719.25
CH	53	727.25	727.25	727.25	727.25
CH	54	735.25	735.25	735.25	735.25
CH	55	743.25	743.25	743.25	743.25
CH	56	751.25	751.25	751.25	751.25
CH	57	759.25	759.25	759.25	759.25
CH	58	767.25	767.25	767.25	767.25
CH	59	775.25	775.25	775.25	775.25
CH	60	783.25	783.25	783.25	783.25
CH	61	791.25	791.25	791.25	791.25
CH	62	799.25	799.25	799.25	799.25
CH	63	807.25	807.25	807.25	807.25
CH	64	815.25	815.25	815.25	815.25
CH	65	823.25	823.25	823.25	823.25
CH	66	831.25	831.25	831.25	831.25
CH	67	839.25	839.25	839.25	839.25
CH	68	847.25	847.25	847.25	847.25
CH	69	855.25	855.25	855.25	855.25
CH	70		863,25		863.25
CH	71		871,25		
CH	72		879,25		
CH	73		887,25		160.00
CH	74	69.25			172.00
CH	75	76.25			220.00
CH	76	83.25			232.00
CH	77	90.25			244.00
CH	78	97.25			256.00
CH	79	59.25			268.00
CH	80	93.25			280.00
S	1	105.25	103.25	103.25	116.75
S	2	112.25	111.25	111.25	128.75
S	3	119.25	119.25	119.25	140.75
S	4	126.25	127.25	127.25	152.75
S	5	133.25	135.25	135.25	164.75
S	6	140.25	143.25	143.25	176.75
S	7	147.25	151.25	151.25	188.75
S	8	154.25	159.25	159.25	200.75
S	9	161.25	167.25	167.25	212.75
S	10	168.25	231.25	231.25	224.75
S	11	231.25	239.25	239.25	236.75
S	12	238.25	247.25	247.25	248.75
S	13	245.25	255.25	255.25	260.75
S	14	252.25	263.25	263.25	272.75

Channel	Number	BG	I	DK	L/L'
S	15	259.25	271.25	271.25	284.75
S	16	266.25	279.25	279.25	296.75
S	17	273.25	287.25	287.25	55.75
S	18	280.25	295.25	295.25	60.50
S	19	287.25	303.25	303.25	63.75
S	20	294.25			
S	21	303.25			303.25
S	22	311.25	311.25	311.25	311.25
S	23	319.25	319.25	319.25	319.25
S	24	327.25	327.25	327.25	327.25
S	25	335.25	335.25	335.25	335.25
S	26	343.25	343.25	343.25	343.25
S	27	351.25	351.25	351.25	351.25
S	28	359.25	359.25	359.25	359.25
S	29	367.25	367.25	367.25	367.25
S	30	375.25	375.25	375.25	375.25
S	31	383.25	383.25	383.25	383.25
S	32	391.25	391.25	391.25	391.25
S	33	399.25	399.25	399.25	399.25
S	34	407.25	407.25	407.25	407.25
S	35	415.25	415.25	415.25	415.25
S	36	423.25	423.25	423.25	423.25
S	37	431.25	431.25	431.25	431.25
S	38	439.25	439.25	439.25	439.25
S	39	447.25	447.25	447.25	447.25
S	40	455.25	455.25	455.25	455.25
S	41	463.25	463.25	463.25	463.25

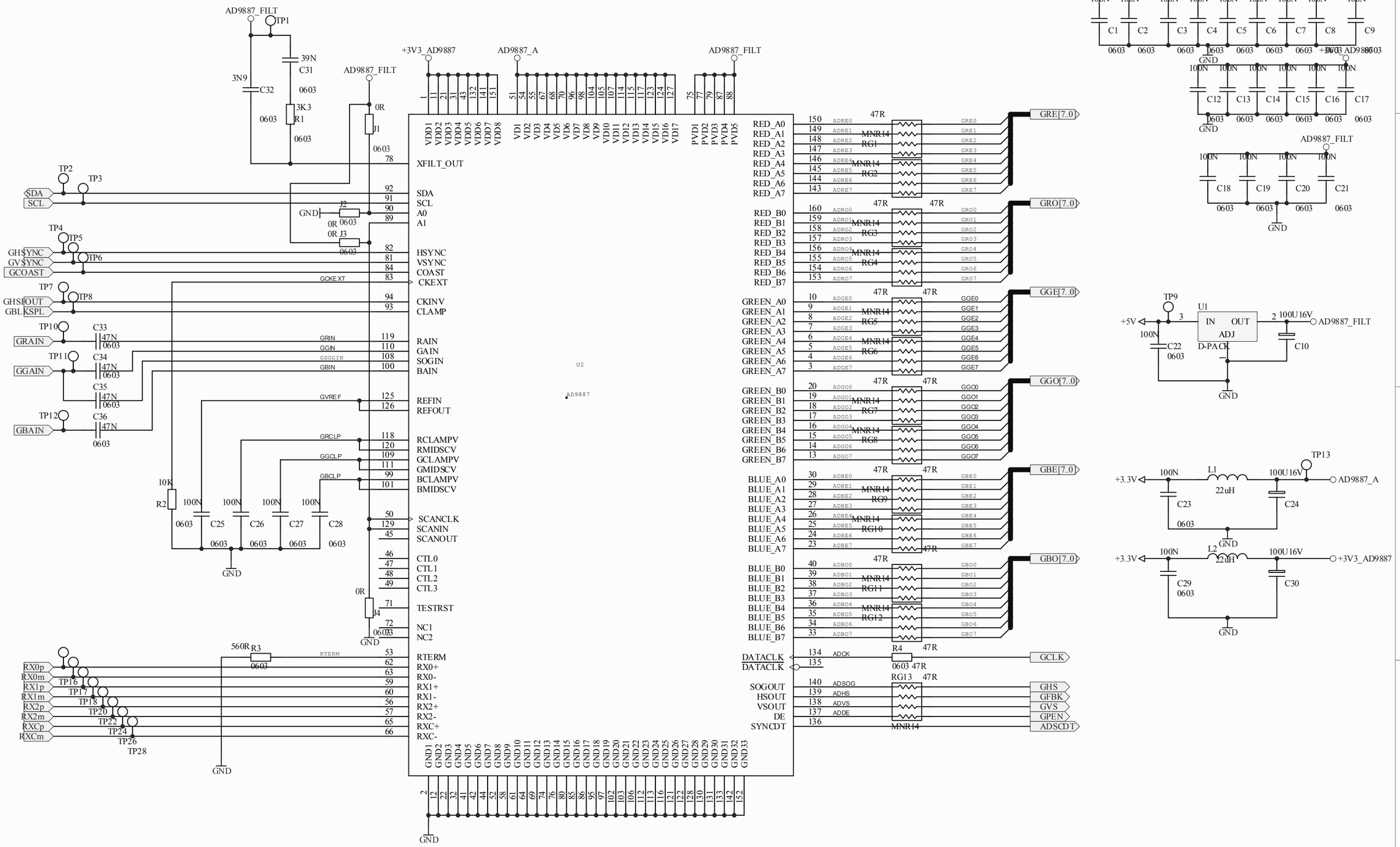
AD9887_FILT
TP1
39N
C31
3N9
C32
0603
3K3
R1
0603
0603
AD9887_FILT
0R
J1
0603
78
XFILT_OUT
+3V3_AD9887
AD9887_A
AD9887_FILT
VDD1 VDD2 VDD3 VDD4 VDD5 VDD6 VDD7 VDD8
VD1 VD2 VD3 VD4 VD5 VD6 VD7 VD8 VD9 VD10 VD11 VD12 VD13 VD14 VD15 VD16 VD17
PVD1 PVD2 PVD3 PVD4 PVD5
TP2
TP3
SDA
SCL
92
91
SDA
SCL
J2
GND
0R 0603
90
A0
0R J3
0603
89
A1
TP4
TP5
TP6
GHSYNC
GVSYNC
GCOAST
82
81
84
HSYNC
VSYNC
COAST
GCKEXT
83
CKEXT
TP7
TP8
GHSFOUT
GBLKSPL
94
93
CKINV
CLAMP
TP10
C33
GRAIN
47N
0603
GRIN
119
RAIN
TP11
C34
GGAIN
47N
0603
GGIN
110
GAIN
GSOGIN
108
SOGIN
C35
47N
0603
GBIN
100
BAIN
GVREF
125
REFIN
126
REFOUT
TP12
C36
GBAIN
47N
0603
GRCLP
118
RCLAMPV
120
RMIDSCV
GGCLP
109
GCLAMPV
111
GMIDSCV
GBCLP
99
BCLAMPV
101
BMIDSCV
10K
R2
100N
C25
0603
100N
C26
0603
100N
C27
0603
100N
C28
0603
50
SCANCLK
129
SCANIN
45
SCANOUT
46
CTL0
47
CTL1
48
CTL2
49
CTL3
0R
J4
0603
71
TESTRST
72
NC1
73
NC2
560R R3
0603
RTERM
53
RTERM
RX0p
RX0m
RX1p
RX1m
RX2p
RX2m
RXCp
RXCm
TP16
TP17
TP18
TP20
TP22
TP24
TP26
TP28
62
RX0+
63
RX0-
59
RX1+
60
RX1-
56
RX2+
57
RX2-
65
RXC+
66
RXC-
U2
AD9887
GND1 GND2 GND3 GND4 GND5 GND6 GND7 GND8 GND9 GND10 GND11 GND12 GND13 GND14 GND15 GND16 GND17 GND18 GND19 GND20 GND21 GND22 GND23 GND24 GND25 GND26 GND27 GND28 GND29 GND30 GND31 GND32 GND33
2 12 22 32 41 42 44 52 58 61 64 69 74 76 80 85 86 95 97 102 103 106 112 113 116 121 122 128 130 131 133 142 152
GND
RED_A0
RED_A1
RED_A2
RED_A3
RED_A4
RED_A5
RED_A6
RED_A7
150 149 148 147 146 145 144 143
ADRE0 ADRE1 ADRE2 ADRE3 ADRE4 ADRE5 ADRE6 ADRE7
47R
MNR14 RG1
MNR14 RG2
GRE0 GRE1 GRE2 GRE3 GRE4 GRE5 GRE6 GRE7
GRE[7..0]
RED_B0
RED_B1
RED_B2
RED_B3
RED_B4
RED_B5
RED_B6
RED_B7
160 159 158 157 156 155 154 153
ADRO0 ADRO1 ADRO2 ADRO3 ADRO4 ADRO5 ADRO6 ADRO7
47R
MNR14 RG3
MNR14 RG4
GRO0 GRO1 GRO2 GRO3 GRO4 GRO5 GRO6 GRO7
GRO[7..0]
GREEN_A0
GREEN_A1
GREEN_A2
GREEN_A3
GREEN_A4
GREEN_A5
GREEN_A6
GREEN_A7
10 9 8 7 6 5 4 3
ADGE0 ADGE1 ADGE2 ADGE3 ADGE4 ADGE5 ADGE6 ADGE7
47R
MNR14 RG5
MNR14 RG6
GGE0 GGE1 GGE2 GGE3 GGE4 GGE5 GGE6 GGE7
GGE[7..0]
GREEN_B0
GREEN_B1
GREEN_B2
GREEN_B3
GREEN_B4
GREEN_B5
GREEN_B6
GREEN_B7
20 19 18 17 16 15 14 13
ADGO0 ADGO1 ADGO2 ADGO3 ADGO4 ADGO5 ADGO6 ADGO7
47R
MNR14 RG7
MNR14 RG8
GGO0 GGO1 GGO2 GGO3 GGO4 GGO5 GGO6 GGO7
GGO[7..0]
BLUE_A0
BLUE_A1
BLUE_A2
BLUE_A3
BLUE_A4
BLUE_A5
BLUE_A6
BLUE_A7
30 29 28 27 26 25 24 23
ADBE0 ADBE1 ADBE2 ADBE3 ADBE4 ADBE5 ADBE6 ADBE7
47R
MNR14 RG9
MNR14 RG10
GBE0 GBE1 GBE2 GBE3 GBE4 GBE5 GBE6 GBE7
GBE[7..0]
BLUE_B0
BLUE_B1
BLUE_B2
BLUE_B3
BLUE_B4
BLUE_B5
BLUE_B6
BLUE_B7
40 39 38 37 36 35 34 33
ADBO0 ADBO1 ADBO2 ADBO3 ADBO4 ADBO5 ADBO6 ADBO7
47R
MNR14 RG11
MNR14 RG12
GBO0 GBO1 GBO2 GBO3 GBO4 GBO5 GBO6 GBO7
GBO[7..0]
DATACLK
DATACLK
134 135
ADCK
R4 47R
0603 47R
GCLK
SOGOUT
HSOUT
VSOUT
DE
SYNCDT
140 139 138 137 136
ADSOG ADHS ADVS ADDE
RG13 47R
MNR14
GHS
GFBK
GVS
GPEN
ADSCDT
AD9887_A
100N C1 0603
100N C2 0603
100N C3 0603
100N C4 0603
100N C5 0603
100N C6 0603
100N C7 0603
100N C8 0603
100N C9 0603
+3V3_AD9887
GND
100N C12 0603
100N C13 0603
100N C14 0603
100N C15 0603
100N C16 0603
100N C17 0603
GND
AD9887_FILT
100N C18 0603
100N C19 0603
100N C20 0603
100N C21 0603
GND
TP9
+5V
3
U1
IN
OUT
ADJ
D-PACK
2
100U16V
AD9887_FILT
100N C22 0603
C10
GND
TP13
+3.3V
100N C23 0603
L1
22uH
100U16V C24
AD9887_A
GND
+3.3V
100N C29 0603
L2
22uH
100U16V C30
+3V3_AD9887
GND

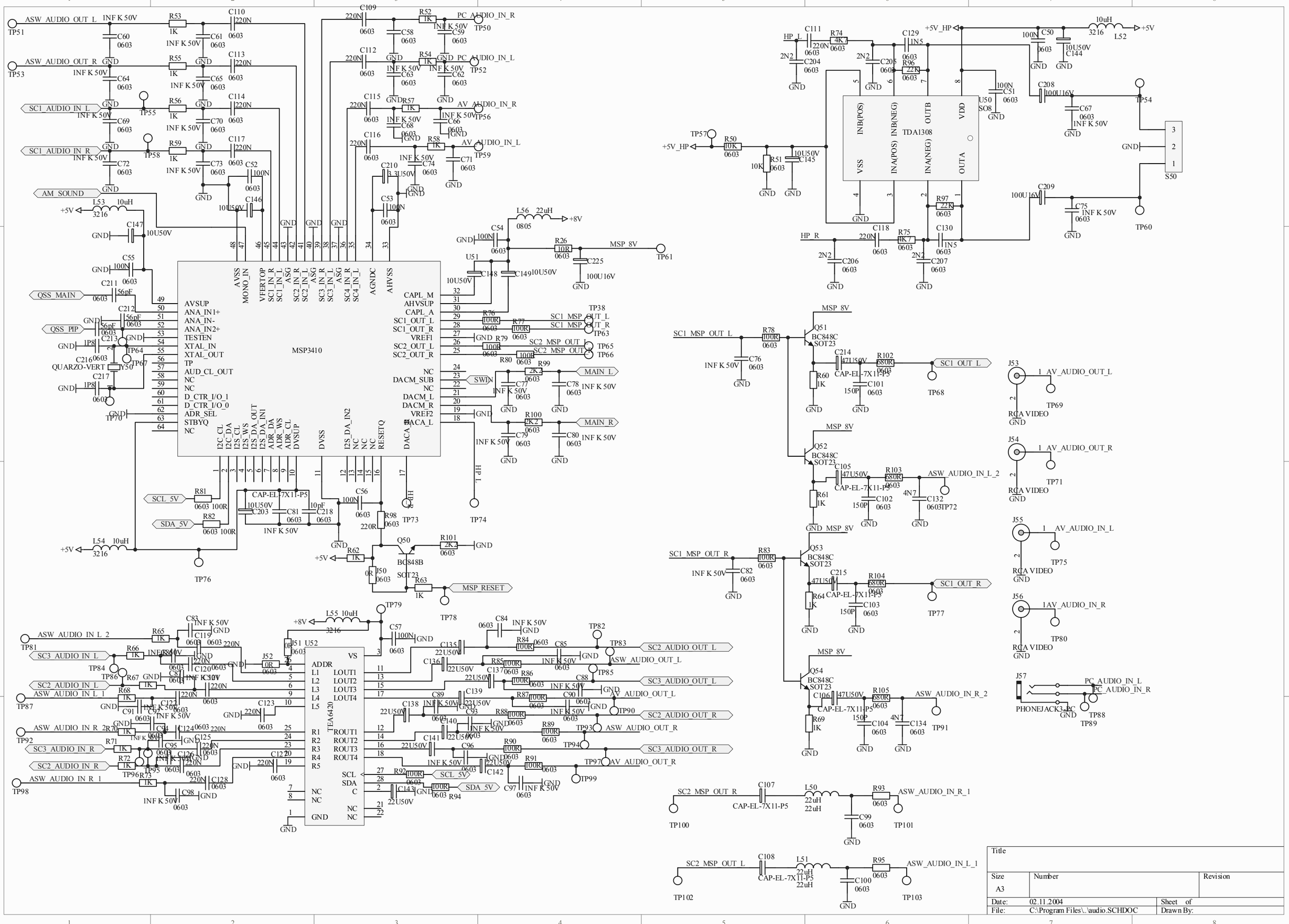
ASW_AUDIO_OUT_L
ASW_AUDIO_OUT_R
SC1_AUDIO_IN_L
SC1_AUDIO_IN_R
AM_SOUND
PC_AUDIO_IN_R
PC_AUDIO_IN_L
AV_AUDIO_IN_R
AV_AUDIO_IN_L
MSP3410
QSS_MAIN
QSS_PIP
QUARZO-VERT
SCL_5V
SDA_5V
MSP_RESET
TDA1308
INB(POS)
INB(NEG)
OUTB
VDD
VSS
INA(POS)
INA(NEG)
OUTA
HP_L
HP_R
+5V_HP
SC1_MSP_OUT_L
SC1_MSP_OUT_R
SC2_MSP_OUT_L
SC2_MSP_OUT_R
SC1_OUT_L
SC1_OUT_R
SC2_OUT_L
SC2_OUT_R
SC3_OUT_L
SC3_OUT_R
MAIN_L
MAIN_R
ASW_AUDIO_IN_L_2
ASW_AUDIO_IN_R_2
ASW_AUDIO_IN_L_1
ASW_AUDIO_IN_R_1
RCA VIDEO
PHONEJACK3-PC
TEA6420
SC3_AUDIO_IN_L
SC3_AUDIO_IN_R
SC2_AUDIO_IN_L
SC2_AUDIO_IN_R
Title
Size
A3
Number
Revision
Date:
02.11.2004
Sheet of
File:
C:\Program Files\..\audio.SCHDOC
Drawn By:

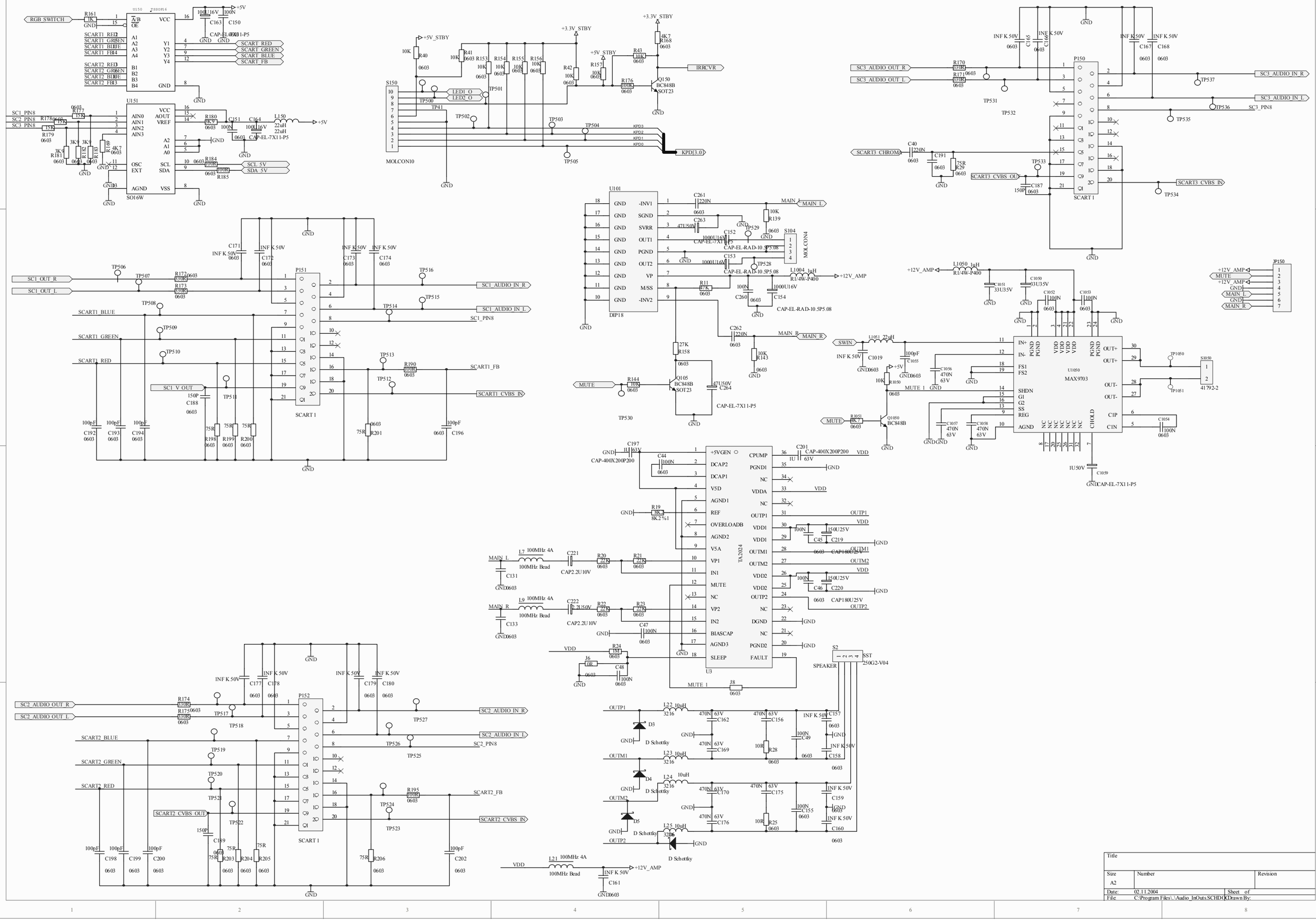
RGB_SWITCH
R161 1K
U150 74HC9PL6
A/B
OE
VCC
A1
A2
A3
A4
B1
B2
B3
B4
GND
Y1
Y2
Y3
Y4
SCART1_RED
SCART1_GREEN
SCART1_BLUE
SCART1_FB
SCART2_RED
SCART2_GREEN
SCART2_BLUE
SCART2_FB
C163 100U 16V
C150 100N
+5V
SCART_RED
SCART_GREEN
SCART_BLUE
SCART_FB
U151
SO16W
AIN0
AIN1
AIN2
AIN3
AOUT
VREF
OSC
EXT
AGND
VSS
SCL
SDA
SC1_PIN8
SC2_PIN8
SC3_PIN8
R177 15K
R178 15K
R179 15K
R181 3K9
R182 3K9
R183 3K9
R169 4K7
R180 4K9
R184 100R
R185 100R
C151 100N
C164 100U 16V
L150 22uH
SCL_5V
SDA_5V
S150
MOLCON10
LED1_O
LED2_O
R40 10K
R41 10K
R153 10K
R154 10K
R155 10K
R156 10K
R42 10K
R157 10K
R43 10K
R168 4K7
R176 100K
Q150 BC848B SOT23
IRRCVR
+3.3V_STBY
+5V_STBY
TP500
TP501
TP502
TP503
TP504
TP505
TP41
KPD3
KPD2
KPD1
KPD0
KPD[3..0]
C165 INF K 50V
C166 INF K 50V
C167 INF K 50V
C168 INF K 50V
P150
SC3_AUDIO_OUT_R
SC3_AUDIO_OUT_L
R170 330R
R171 330R
SC3_AUDIO_IN_R
SC3_AUDIO_IN_L
SC3_PIN8
TP531
TP532
TP535
TP536
TP537
SCART3_CHROMA
SCART3_CVBS_OUT
C40 220N
C191 100N
R29 75R
C187 150P
TP533
TP534
SCART3_CVBS_IN
SCART 1
U101
DIP18
GND
-INV1
SGND
SVRR
OUT1
PGND
OUT2
VP
M/SS
-INV2
C261 220N
C263 47U50V
C152 1000U16V
C153 1000U16V
C260 100N
C154 1000U16V
C262 220N
R139 10K
R11 47K
R158 27K
R143 10K
R144 10R
Q105 BC848B SOT23
C264 47U50V
MAIN_L
MAIN_R
MUTE
+12V_AMP
TP528
TP529
TP530
S104
MOLCON4
CAP-EL-RAD-10.5P5.08
CAP-EL-7X11-P5
SC1_OUT_R
SC1_OUT_L
R172 330R
R173 330R
P151
SCART 1
SC1_AUDIO_IN_R
SC1_AUDIO_IN_L
SC1_PIN8
SCART1_BLUE
SCART1_GREEN
SCART1_RED
SCART1_FB
SCART1_CVBS_IN
SC1_V_OUT
C188 150P
C171 INF K 50V
C172 INF K 50V
C173 INF K 50V
C174 INF K 50V
C192 100pF
C193 100pF
C194 100pF
R198 75R
R199 75R
R200 75R
R190 100R
R201 75R
C196 100pF
TP506
TP507
TP508
TP509
TP510
TP511
TP512
TP513
TP514
TP515
TP516
L1050 1uH R1/4W-P400
C1050 33U35V
C1051 33U35V
C1052 100N
C1053 100N
JP150
+12V_AMP
MUTE
GND
MAIN_L
MAIN_R
SWIN
L1051 22uH
C1019 INF K 50V
C1055 100pF
C1056 470N 63V
C1057 470N 63V
C1058 470N 63V
C1054 100N
C1059 1U50V
R1050 10K
R1051 10K
Q1050 BC848B
MUTE_1
U1050
MAX9703
IN+
IN-
PGND
VDD
FS1
FS2
SHDN
GI
G2
SS
REG
CHOLD
AGND
OUT+
OUT-
C1P
C1N
S1050
41792-2
TP1050
TP1051
C197 1U 63V
C44 100N
C201 1U 63V
CAP-400X200P200
+5VGEN
DCAP2
DCAP1
V5D
AGND1
REF
OVERLOADB
AGND2
V5A
VP1
IN1
MUTE
NC
VP2
IN2
BIASCAP
AGND3
SLEEP
CPUMP
PGND1
NC
VDDA
NC
OUTP1
VDD1
VDD1
OUTM1
OUTM2
VDD2
VDD2
OUTP2
NC
DGND
NC
PGND2
FAULT
TA2024
U3
R19 8K2 8K2%1
L7 100MHz 4A
L9 100MHz 4A
100MHz Bead
C131
C133
C221 2.2U50V
C222 2.2U50V
CAP2.2U10V
R20 22R
R21 22R
R22 22R
R23 22R
C47 100N
R24 1M
J6 0R
C48 100N
J8
MUTE_1
C45 150U25V
C219 CAP180U25V
C46 150U25V
C220 CAP180U25V
OUTP1
OUTM1
OUTM2
OUTP2
VDD
S2
SST 250G2-V04
SPEAKER
L22 10uH
L23 10uH
L24 10uH
L25 10uH
3216
D3
D4
D5
D Schottky
C162 470N 63V
C169 470N 63V
C170 470N 63V
C176 470N 63V
C156 470N 63V
C175 470N 63V
R28 10R
R25 10R
C49 100N
C155 100N
C157 INF K 50V
C158 INF K 50V
C159 INF K 50V
C160 INF K 50V
L21 100MHz 4A
C161 INF K 50V
SC2_AUDIO_OUT_R
SC2_AUDIO_OUT_L
R174 330R
R175 330R
P152
SCART 1
SC2_AUDIO_IN_R
SC2_AUDIO_IN_L
SC2_PIN8
SCART2_BLUE
SCART2_GREEN
SCART2_RED
SCART2_FB
SCART2_CVBS_IN
SCART2_CVBS_OUT
C189 150P
C177 INF K 50V
C178 INF K 50V
C179 INF K 50V
C180 INF K 50V
C198 100pF
C199 100pF
C200 100pF
R203 75R
R204 75R
R205 75R
R195 100R
R206 75R
C202 100pF
TP517
TP518
TP519
TP520
TP521
TP522
TP523
TP524
TP525
TP526
TP527
Title
Size A2
Number
Revision
Date: 02.11.2004
Sheet of
File: C:\Program Files\...\Audio_InOuts.SCHDOC
Drawn By:

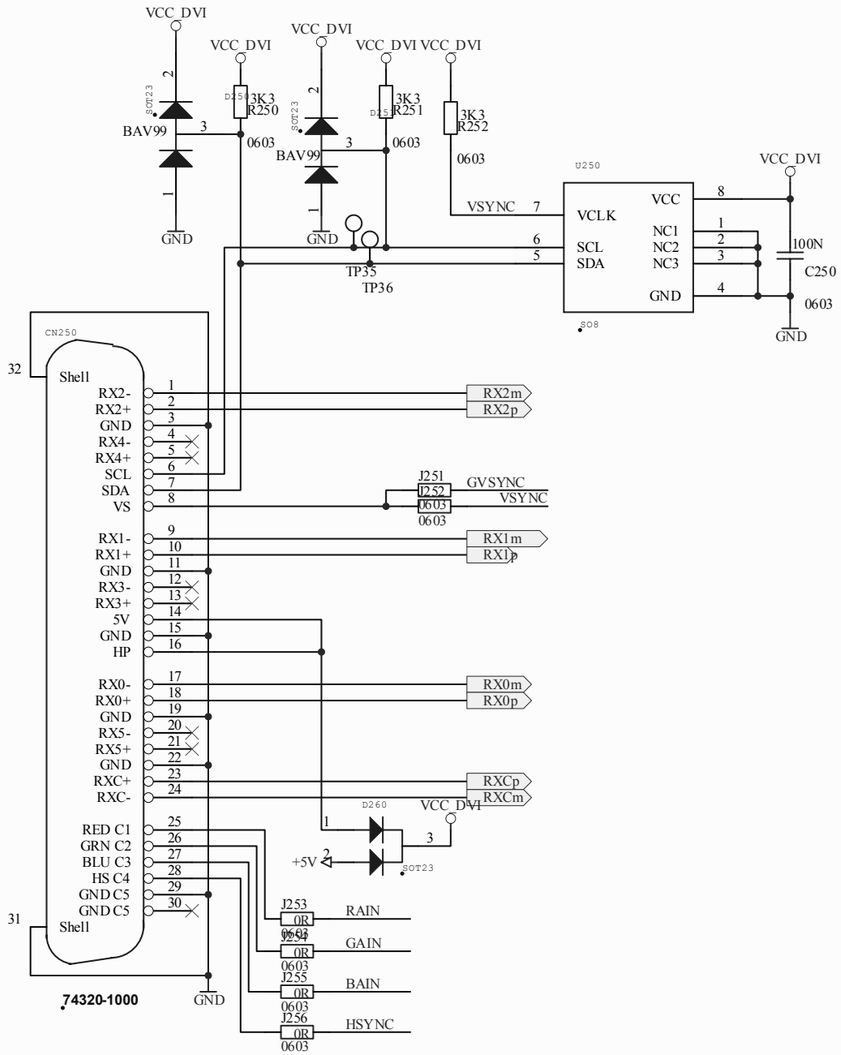
VCC_DVI
BAV99
3K3 R250
3K3 R251
3K3 R252
0603
GND
TP35
TP36
U250
VCC
VCLK
SCL
SDA
NC1
NC2
NC3
GND
SO8
VSYNC
100N
C250
CN250
Shell
RX2-
RX2+
RX4-
RX4+
SCL
SDA
VS
RX1-
RX1+
RX3-
RX3+
5V
HP
RX0-
RX0+
RX5-
RX5+
RXC+
RXC-
RED C1
GRN C2
BLU C3
HS C4
GND C5
RX2m
RX2p
RX1m
RX1p
RX0m
RX0p
RXCp
RXCm
J251
J252
GVSYNC
J253
J254
J255
J256
RAIN
GAIN
BAIN
HSYNC
0R
D260
SOT23
+5V
74320-1000

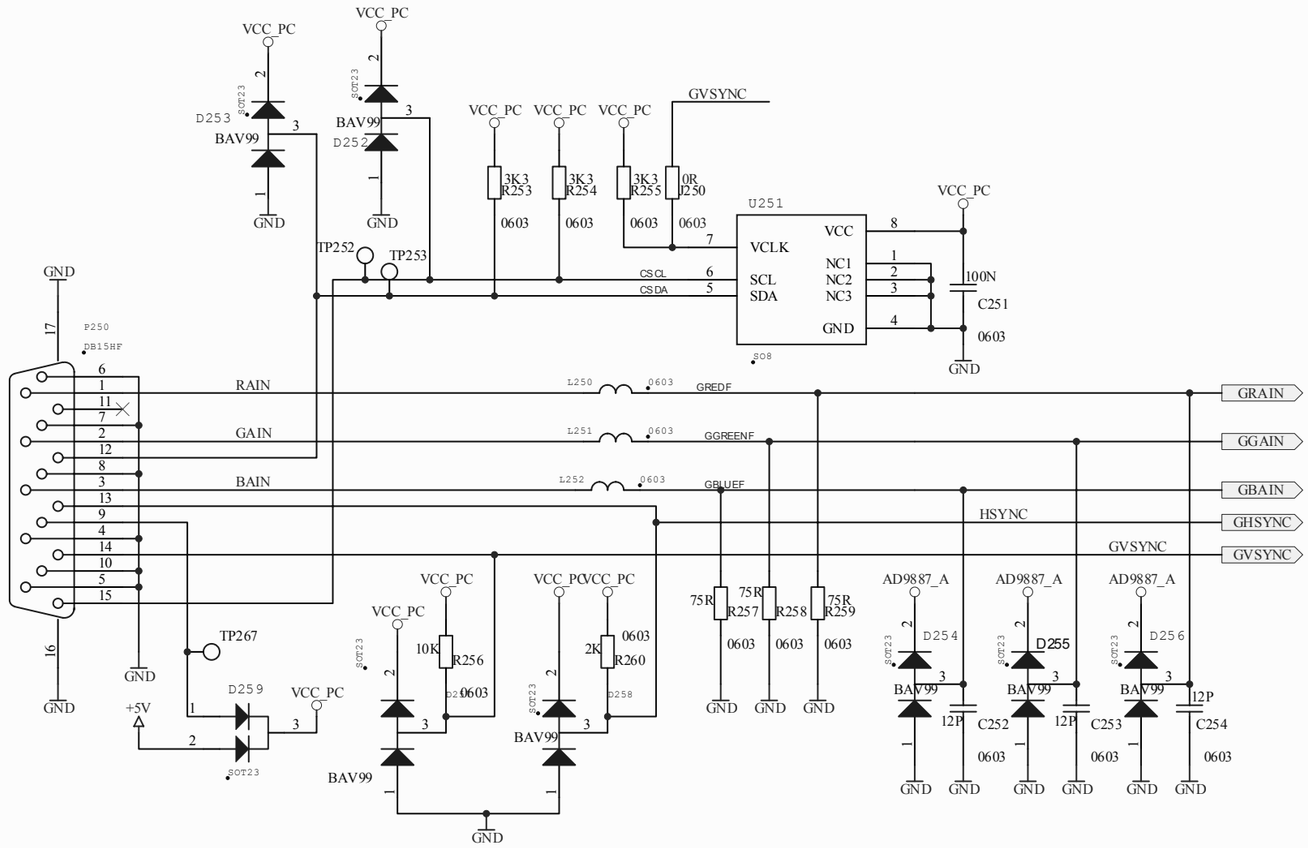
VCC_PC
D253
D252
BAV99
GND
3K3 R253
3K3 R254
3K3 R255
0R J250
0603
GVSYNC
TP252
TP253
U251
VCC
VCLK
SCL
SDA
NC1
NC2
NC3
CSCL
CSDA
100N
C251
P250
DB15HF
RAIN
GAIN
BAIN
L250
L251
L252
GREDF
GGREENF
GBLUEF
GRAIN
GGAIN
GBAIN
HSYNC
GHSYNC
GVSYNC
TP267
D259
+5V
10K R256
2K R260
D258
75R R257
75R R258
75R R259
AD9887_A
D254
D255
D256
C252
C253
C254
12P

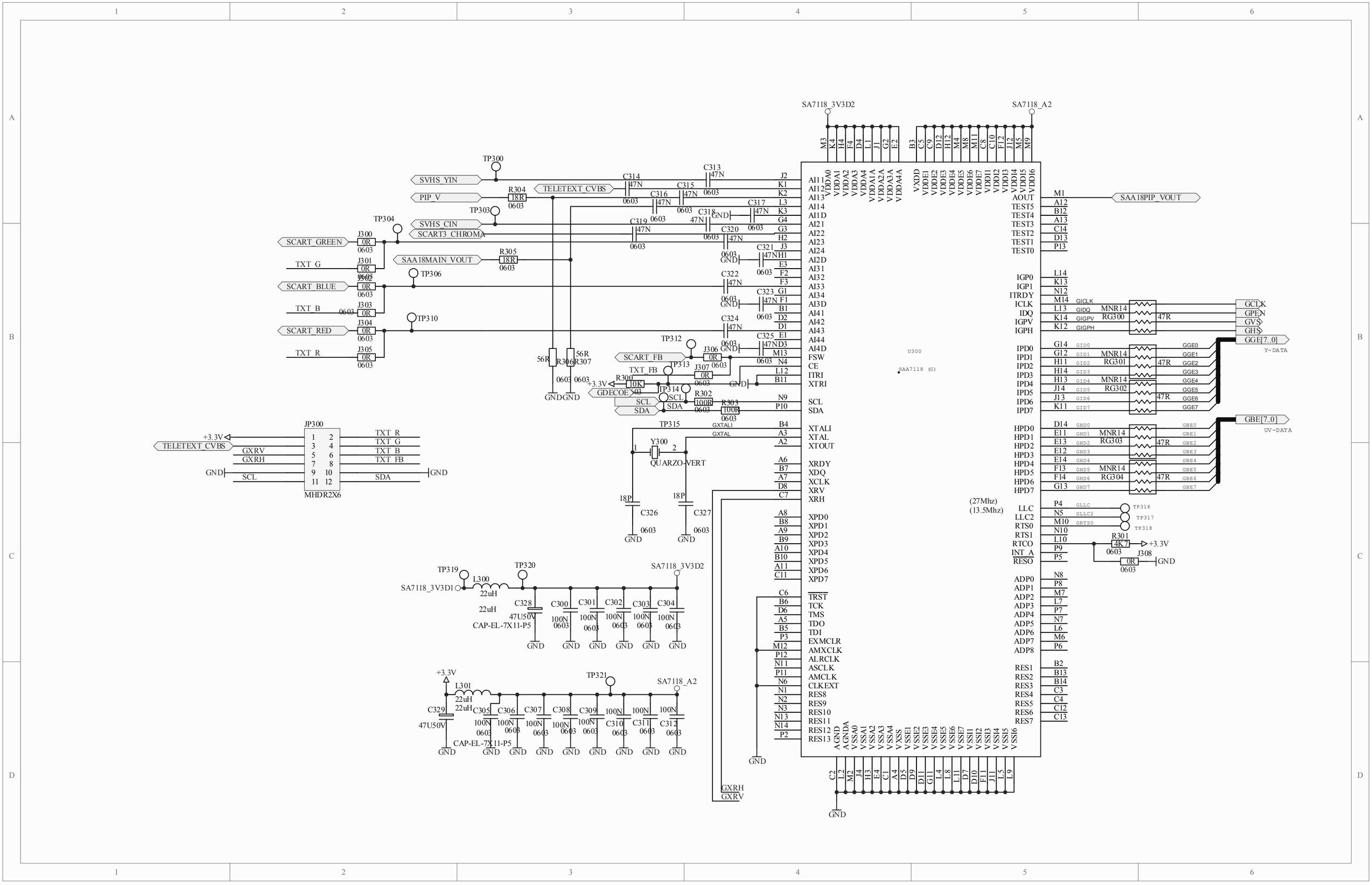

SA7118_3V3D2
SA7118_A2
SVHS_YIN
PIP_V
SVHS_CIN
SCART3_CHROMA
SCART_GREEN
TXT_G
SCART_BLUE
TXT_B
SCART_RED
TXT_R
SAA18MAIN_VOUT
TELETEXT_CVBS
SCART_FB
TXT_FB
GDECOE
SCL
SDA
SAA18PIP_VOUT
GCLK
GPEN
GVS
GHS
GGE[7..0]
Y-DATA
GBE[7..0]
UV-DATA
U300
SAA7118 (G)
(27Mhz)
(13.5Mhz)
JP300
MHDR2X6
Y300
QUARZO-VERT
GXRV
GXRH
GND
+3.3V
SA7118_3V3D1
L300
22uH
CAP-EL-7X11-P5
47U50V
L301
TP300
TP303
TP304
TP306
TP310
TP312
TP313
TP314
TP315
TP316
TP317
TP318
TP319
TP320
TP321

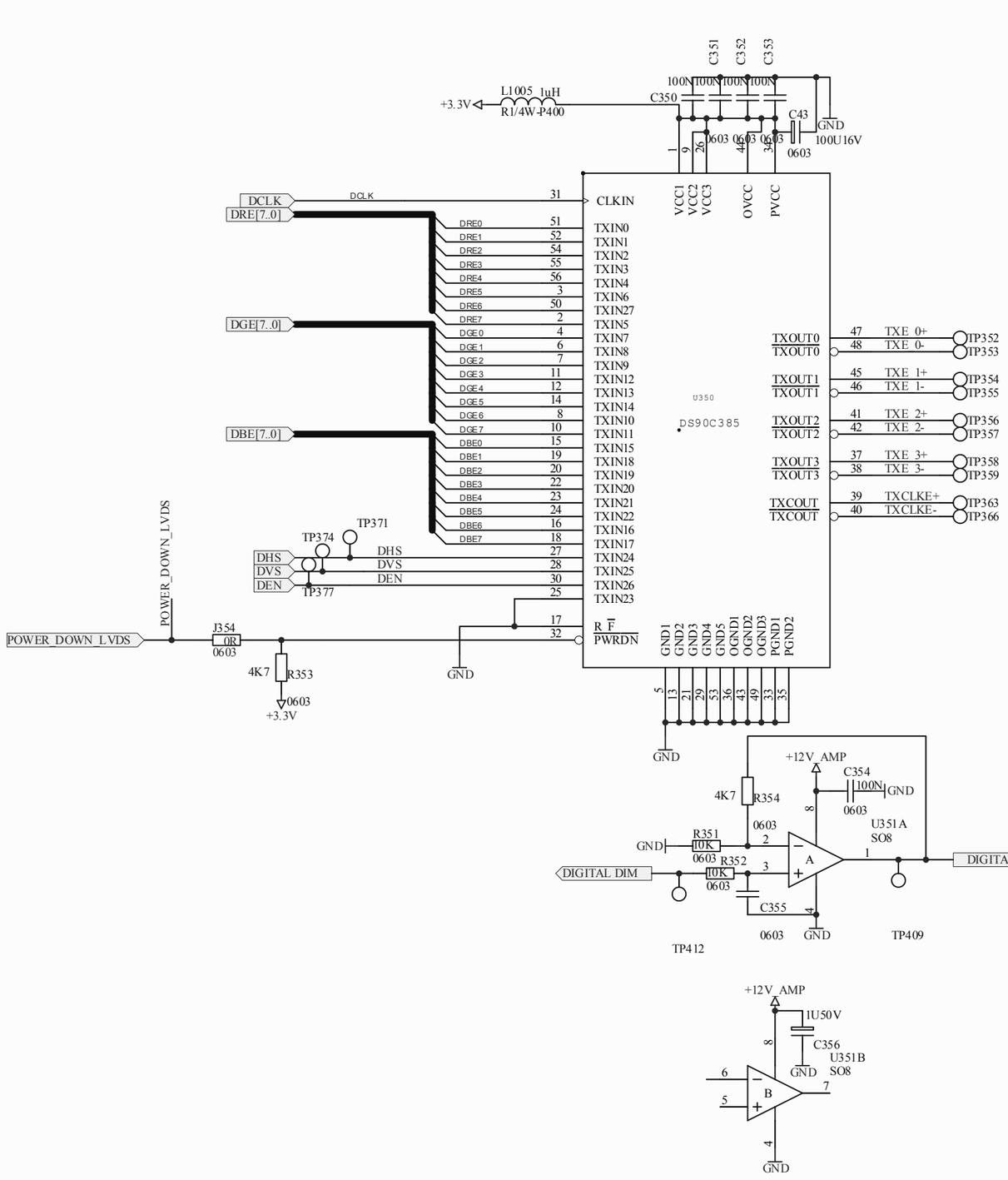
L1005 1uH
R1/4W-P400
+3.3V
C351
C352
C353
100N
C350
C43
GND
100U16V
0603
DCLK
DRE[7..0]
DGE[7..0]
DBE[7..0]
CLKIN
TXIN0
TXIN1
TXIN2
TXIN3
TXIN4
TXIN6
TXIN27
TXIN5
TXIN7
TXIN8
TXIN9
TXIN12
TXIN13
TXIN14
TXIN10
TXIN11
TXIN15
TXIN18
TXIN19
TXIN20
TXIN21
TXIN22
TXIN16
TXIN17
TXIN24
TXIN25
TXIN26
TXIN23
VCC1
VCC2
VCC3
OVCC
PVCC
U350
DS90C385
TXOUT0
TXOUT1
TXOUT2
TXOUT3
TXCOUT
TXE 0+
TXE 0-
TXE 1+
TXE 1-
TXE 2+
TXE 2-
TXE 3+
TXE 3-
TXCLKE+
TXCLKE-
TP352
TP353
TP354
TP355
TP356
TP357
TP358
TP359
TP363
TP366
TP371
TP374
TP377
DHS
DVS
DEN
POWER_DOWN_LVDS
J354
0R
4K7
R353
R F
PWRDN
GND1
GND2
GND3
GND4
GND5
OGND1
OGND2
OGND3
PGND1
PGND2
+12V_AMP
C354
100N
4K7
R354
U351A
SO8
R351
10K
R352
C355
DIGITAL DIM
DIGITAL DIM_OUT
TP412
TP409
1U50V
C356
U351B
A
B

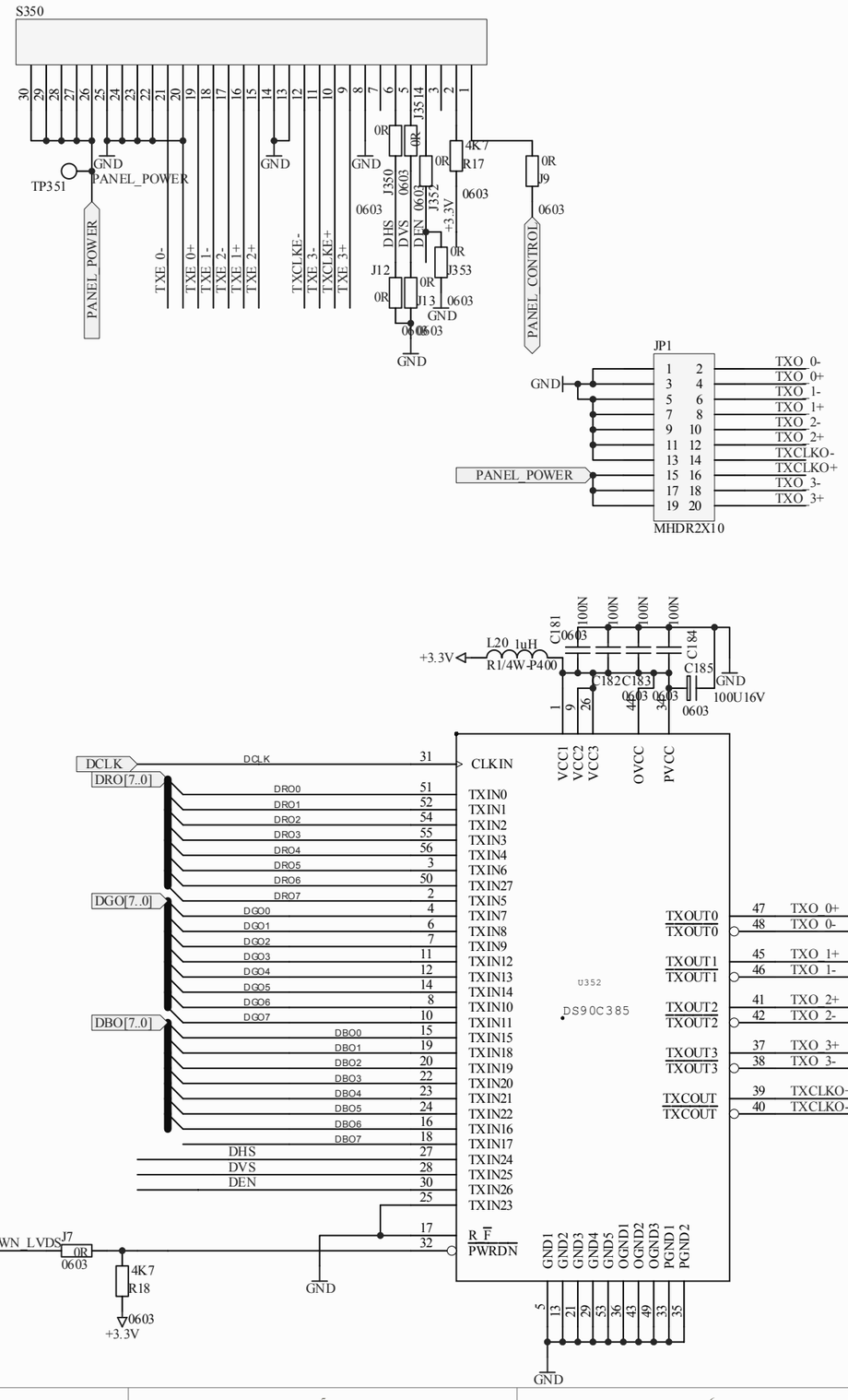
S350
TP351
PANEL_POWER
GND
TXE 0-
TXE 0+
TXE 1-
TXE 2-
TXE 1+
TXE 2+
TXCLKE-
TXE 3-
TXCLKE+
TXE 3+
J350
J351
J352
J353
J12
J13
DHS
DVS
DEN
+3.3V
4K7
R17
0R
J9
PANEL_CONTROL
JP1
MHDR2X10
TXO_0-
TXO_0+
TXO_1-
TXO_1+
TXO_2-
TXO_2+
TXCLKO-
TXCLKO+
TXO_3-
TXO_3+
L20 1uH
R1/4W-P400
C181
C182
C183
C184
C185
DRO[7..0]
DGO[7..0]
DBO[7..0]
U352
DS90C385
J7
R18

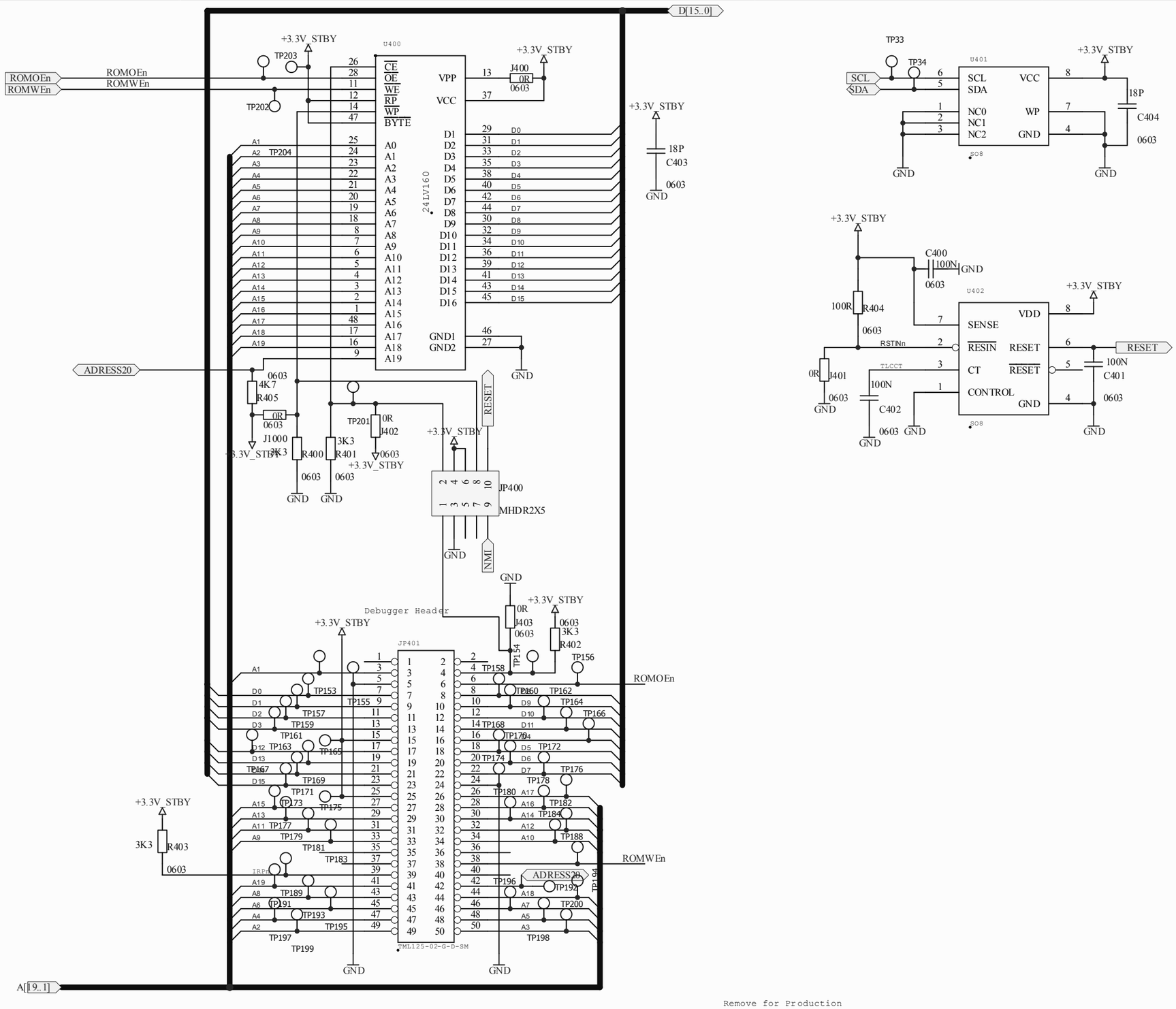
D[15..0]
U400
+3.3V_STBY
TP203
TP202
TP204
ROMOEn
ROMWEn
ADRESS20
J400
0R
0603
CE
OE
WE
RP
WP
BYTE
VPP
VCC
GND1
GND2
A0
A1
A2
A3
A4
A5
A6
A7
A8
A9
A10
A11
A12
A13
A14
A15
A16
A17
A18
A19
D1
D2
D3
D4
D5
D6
D7
D8
D9
D10
D11
D12
D13
D14
D15
D16
24LV160
GND
18P
C403
R405
4K7
J1000
3K3
R400
R401
TP201
J402
RESET
JP400
MHDR2X5
NMI
Debugger Header
JP401
J403
R402
TP154
TP156
TP158
TP160
TP162
TP164
TP166
TP168
TP170
TP172
TP174
TP176
TP178
TP180
TP182
TP184
TP188
TP192
TP194
TP196
TP198
TP200
TP153
TP155
TP157
TP159
TP161
TP163
TP165
TP167
TP169
TP171
TP173
TP175
TP177
TP179
TP181
TP183
TP189
TP191
TP193
TP195
TP197
TP199
FML125-02-G-D-SM
ROMOEn
ROMWEn
ADRESS20
A[19..1]
TP33
TP34
U401
SCL
SDA
NC0
NC1
NC2
VCC
WP
GND
SO8
C404
C400
100N
R404
100R
U402
SENSE
RESIN
CT
CONTROL
VDD
RESET
RSTINn
TLCCT
J401
C402
C401
Remove for Production

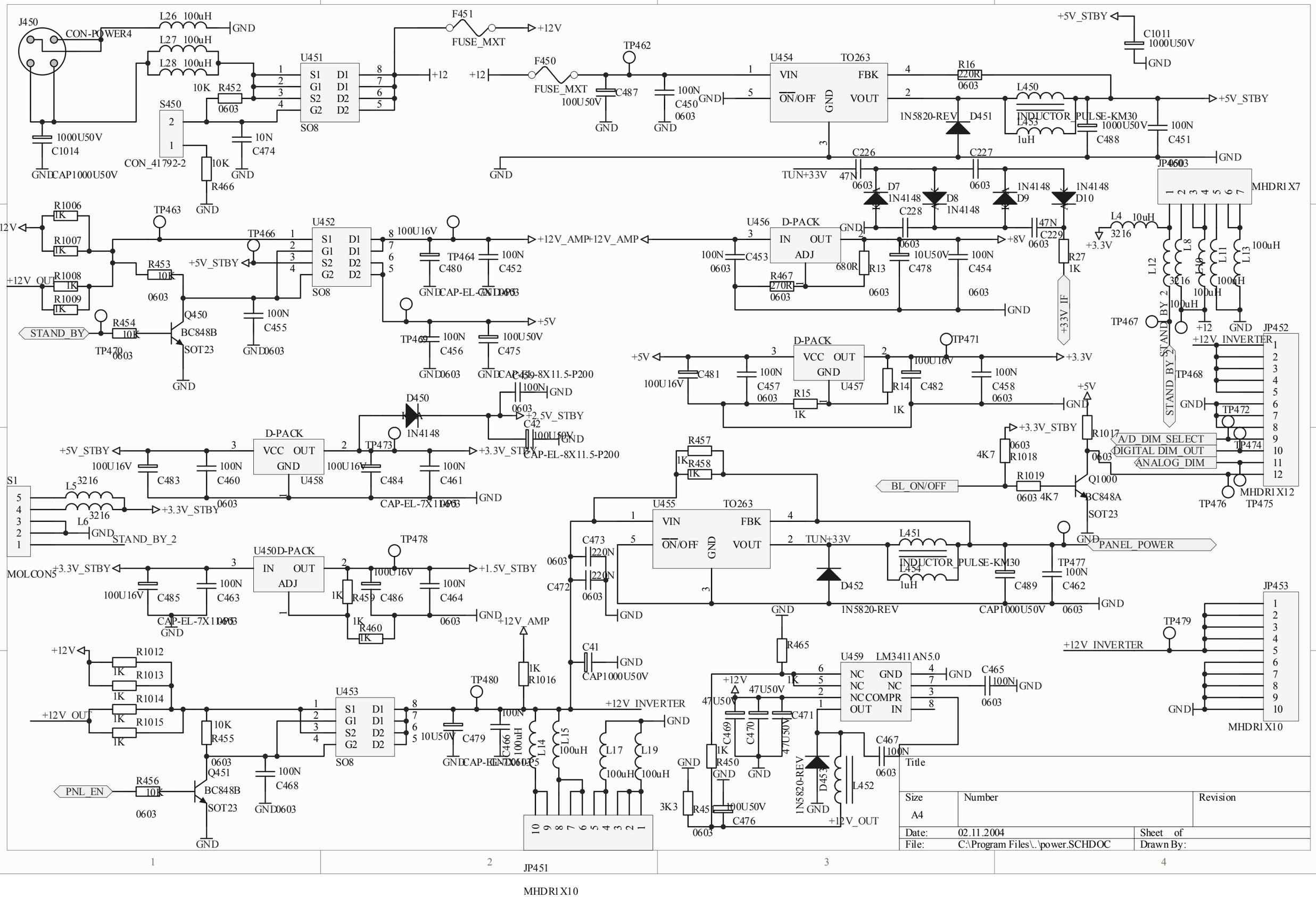

J450
CON-POWER4
L26 100uH
L27 100uH
L28 100uH
GND
U451
SO8
S450
CON_41792-2
R452
0603
10K
10N
C474
R466
C1014
1000U50V
CAP1000U50V
F451
FUSE_MXT
+12V
F450
TP462
C487
100U50V
C450
100N
U454
TO263
VIN
FBK
ON/OFF
VOUT
R16
220R
L450
INDUCTOR_PULSE-KM30
L453
1uH
C488
C451
1N5820-REV
D451
+5V_STBY
C1011
1000U50V
C226
C227
47N
TUN+33V
D7
D8
D9
D10
1N4148
C228
C229
JP460
MHDR1X7
L4
10uH
3216
+3.3V
L12
L8
L10
L11
L13
100uH
R1006
R1007
R1008
R1009
1K
TP463
TP466
U452
100U16V
TP464
C480
C452
+12V_AMP
U456
D-PACK
IN
OUT
ADJ
C453
R467
270R
680R
R13
C478
C454
+8V
R27
1K
+33V_IF
+12V_OUT
R453
R454
STAND_BY
TP470
Q450
BC848B
SOT23
C455
TP469
C456
C475
+5V
TP467
STAND_BY_2
TP468
JP452
+12V_INVERTER
TP472
TP474
TP476
TP475
MHDR1X12
D450
1N4148
C459
C42
CAP-EL-8X11.5-P200
+2.5V_STBY
+3.3V_STBY
D-PACK
VCC
OUT
GND
U458
TP473
C483
C460
C484
C461
CAP-EL-7X11.5-P5
S1
L5
L6
STAND_BY_2
MOLCON5
U450D-PACK
TP478
C485
C463
C486
C464
R459
R460
+1.5V_STBY
U457
C481
C457
R15
R14
C482
C458
TP471
R457
R458
U455
TO263
C473
C472
220N
TUN+33V
D452
L451
L454
INDUCTOR_PULSE-KM30
C489
C462
TP477
CAP1000U50V
1N5820-REV
A/D_DIM_SELECT
DIGITAL_DIM_OUT
ANALOG_DIM
BL_ON/OFF
R1017
R1018
R1019
4K7
Q1000
BC848A
SOT23
PANEL_POWER
JP453
TP479
MHDR1X10
R1012
R1013
R1014
R1015
R455
R456
Q451
PNL_EN
U453
TP480
C479
C466
C468
R1016
C41
CAP1000U50V
L14
L15
L17
L19
R465
U459
LM3411AN5.0
NC
COMPR
C465
C469
C470
C471
47U50V
R450
R451
3K3
C476
C467
D453
L452
+12V_OUT
Title
Size
A4
Number
Revision
Date:
02.11.2004
Sheet of
File:
C:\Program Files\..\power.SCHDOC
Drawn By:
JP451
MHDR1X10

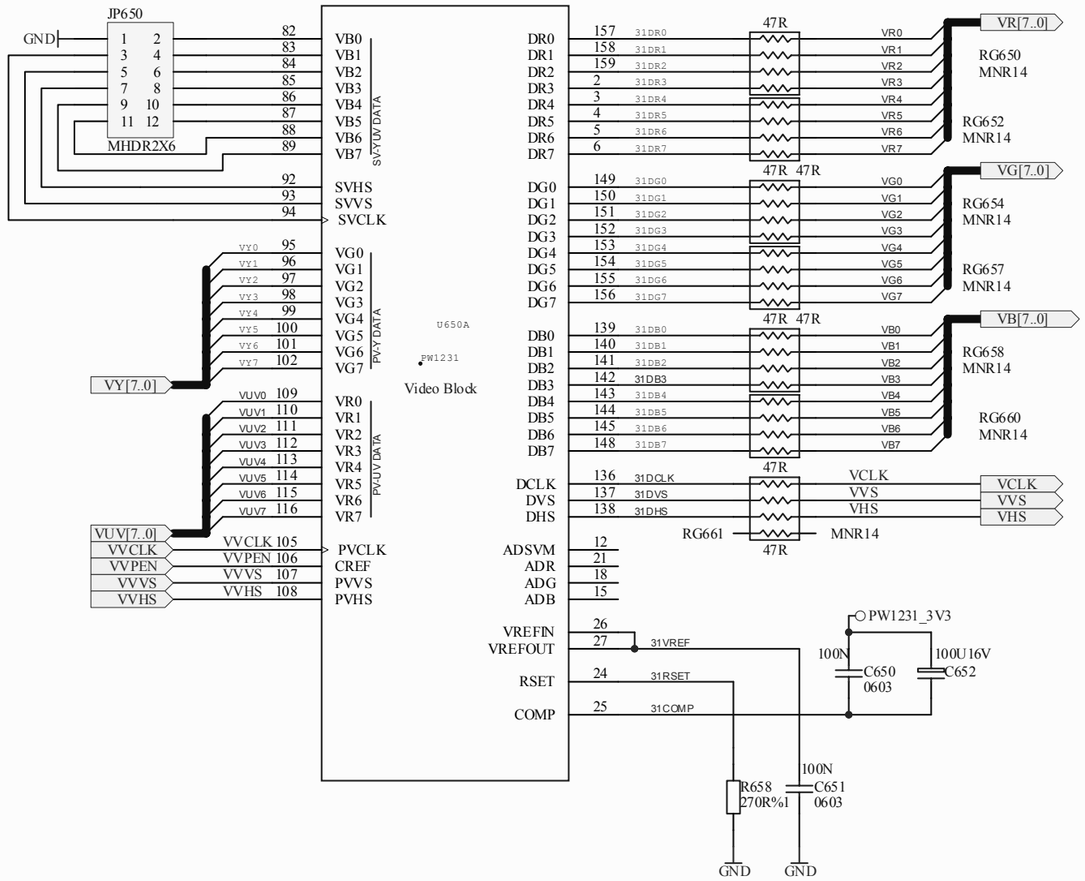
JP650
GND
MHDR2X6
VB0
VB1
VB2
VB3
VB4
VB5
VB6
VB7
SVHS
SVVS
SVCLK
VG0
VG1
VG2
VG3
VG4
VG5
VG6
VG7
VY[7..0]
VR0
VR1
VR2
VR3
VR4
VR5
VR6
VR7
VUV[7..0]
PVCLK
CREF
PVVS
PVHS
VVCLK
VVPEN
VVVS
VVHS
U650A
PW1231
Video Block
DR0
DR1
DR2
DR3
DR4
DR5
DR6
DR7
DG0
DG1
DG2
DG3
DG4
DG5
DG6
DG7
DB0
DB1
DB2
DB3
DB4
DB5
DB6
DB7
DCLK
DVS
DHS
ADSVM
ADR
ADG
ADB
VREFIN
VREFOUT
RSET
COMP
47R
VR[7..0]
RG650
MNR14
RG652
MNR14
VG[7..0]
RG654
MNR14
RG657
MNR14
VB[7..0]
RG658
MNR14
RG660
MNR14
RG661
VCLK
VVS
VHS
31VREF
31RSET
31COMP
PW1231_3V3
100N
C650
0603
100U16V
C652
R658
270R%1
C651
0603
VY0
VY1
VY2
VY3
VY4
VY5
VY6
VY7
VUV0
VUV1
VUV2
VUV3
VUV4
VUV5
VUV6
VUV7
RG659
VPEN
RG651
MNR14
RG653
MNR14
RG655
MNR14
RG656
MNR14
PW1231_3V3_SW
R650
R651
R652
R653
R654
10K
0603
31TDO
31TCK
31TDI
31TMS
31TRSTn
TDO
TCK
TDI
TMS
TRST
I2CA1
I2CA2
SCL
SDA
XTALI
XTALO
RESETn
DEN
TESTCLK
TEST
CGMS
MACRO
U650C
Host IF Block
Y650
QUARZO-VERT
R655
4K7
TP651
R657
2M2
C653
18P
C654
GND

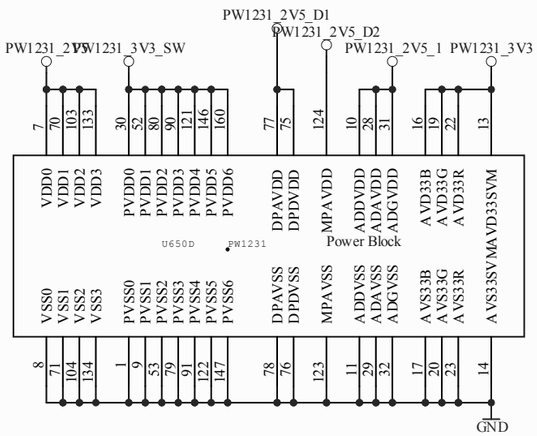
PW1231_2V5_D1
PW1231_2V5_D2
PW1231_2V5
PW1231_3V3_SW
PW1231_2V5_1
PW1231_3V3
VDD0
VDD1
VDD2
VDD3
PVDD0
PVDD1
PVDD2
PVDD3
PVDD4
PVDD5
PVDD6
DPAVDD
DPDVDD
MPAVDD
ADDVDD
ADAVDD
ADGVDD
AVD33B
AVD33G
AVD33R
AVD33SVM
VSS0
VSS1
VSS2
VSS3
PVSS0
PVSS1
PVSS2
PVSS3
PVSS4
PVSS5
PVSS6
DPAVSS
DPDVSS
MPAVSS
ADDVSS
ADAVSS
ADGVSS
AVS33B
AVS33G
AVS33R
U650D
PW1231
Power Block
GND

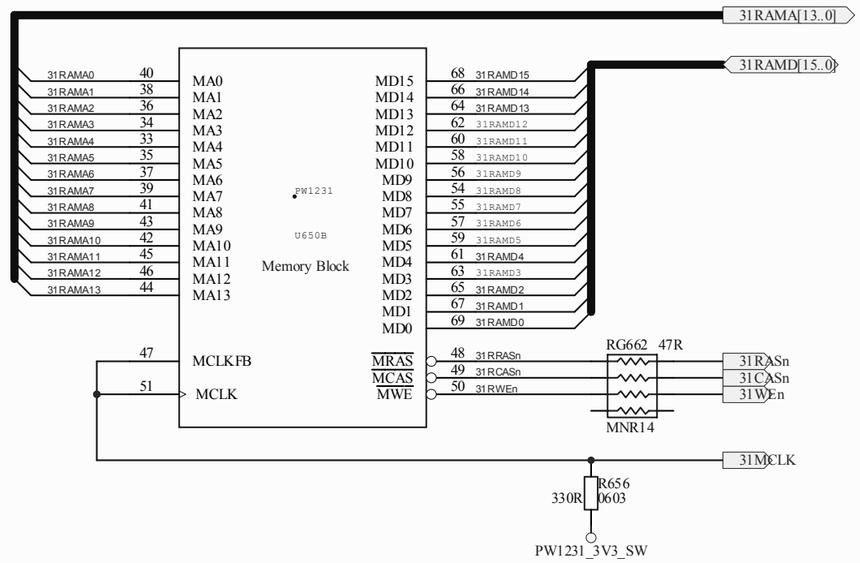
31RAMA[13..0]
31RAMD[15..0]
MA0
MA1
MA2
MA3
MA4
MA5
MA6
MA7
MA8
MA9
MA10
MA11
MA12
MA13
MCLKFB
MCLK
MD15
MD14
MD13
MD12
MD11
MD10
MD9
MD8
MD7
MD6
MD5
MD4
MD3
MD2
MD1
MD0
MRAS
MCAS
MWE
U650B
PW1231
Memory Block
RG662 47R
MNR14
31RRASn
31RCASn
31RWEn
31MCLK
R656
330R
0603
PW1231_3V3_SW

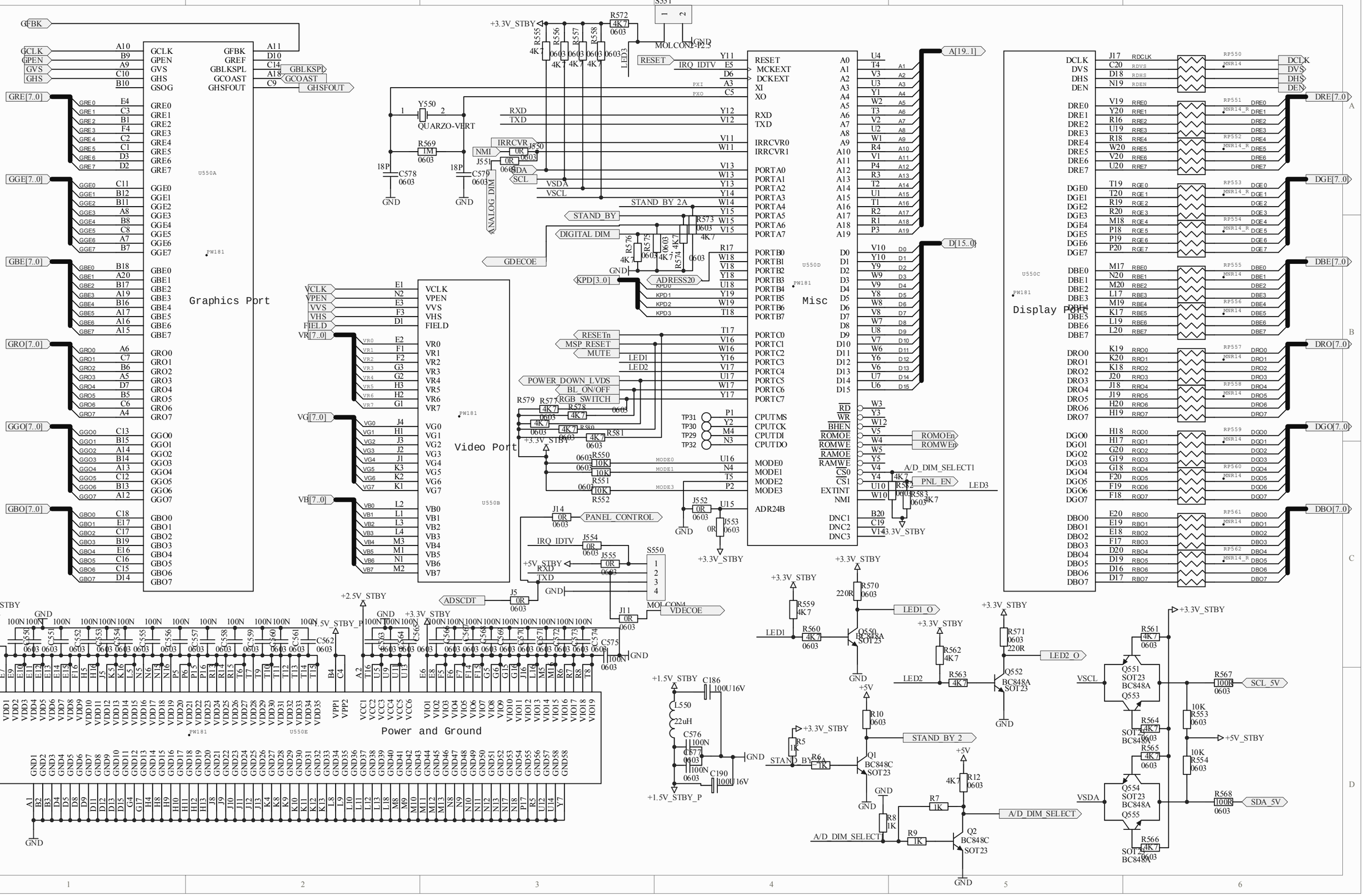
Graphics Port
Video Port
Power and Ground
Misc
Display Port
GFBK
GCLK
GPEN
GVS
GHS
GSOG
GREF
GBLKSPL
GCOAST
GHSFOUT
GRE[7..0]
GGE[7..0]
GBE[7..0]
GRO[7..0]
GGO[7..0]
GBO[7..0]
U550A
PW181
VCLK
VPEN
VVS
VHS
FIELD
VR[7..0]
VG[7..0]
VB[7..0]
U550B
VDD1
VDD2
VDD3
VDD4
VDD5
VDD6
VDD7
VDD8
VDD9
VDD10
VDD11
VDD12
VDD13
VDD14
VDD15
VDD16
VDD17
VDD18
VDD19
VDD20
VDD21
VDD22
VDD23
VDD24
VDD25
VDD26
VDD27
VDD28
VDD29
VDD30
VDD31
VDD32
VDD33
VDD34
VDD35
VPP1
VPP2
VCC1
VCC2
VCC3
VCC4
VCC5
VCC6
VIO1
VIO2
VIO3
VIO4
VIO5
VIO6
VIO7
VIO8
VIO9
VIO10
VIO11
VIO12
VIO13
VIO14
VIO15
VIO16
VIO17
VIO18
VIO19
GND1
GND2
GND3
GND4
GND5
GND6
GND7
GND8
GND9
GND10
GND11
GND12
GND13
GND14
GND15
GND16
GND17
GND18
GND19
GND20
GND21
GND22
GND23
GND24
GND25
GND26
GND27
GND28
GND29
GND30
GND31
GND32
GND33
GND34
GND35
GND36
GND37
GND38
GND39
GND40
GND41
GND42
GND43
GND44
GND45
GND46
GND47
GND48
GND49
GND50
GND51
GND52
GND53
GND54
GND55
GND56
GND57
GND58
U550E
+3.3V_STBY
+5V_STBY
+2.5V_STBY
+1.5V_STBY
+1.5V_STBY_P
GND
S551
MOLCON2-P2.5
LED5
RESET
IRQ_IDTV
PXI
PXO
Y550
QUARZO-VERT
RXD
TXD
IRRCVR
NMI
SDA
SCL
ANALOG_DIM
STAND_BY
STAND_BY 2A
DIGITAL DIM
GDECOE
KPD[3..0]
ADRESS20
RESETn
MSP_RESET
MUTE
LED1
LED2
POWER_DOWN_LVDS
BL_ON/OFF
RGB_SWITCH
MODE0
MODE1
MODE3
PANEL_CONTROL
ADSCDT
VDECOE
MOLCON4
S550
U550D
RESET
MCKEXT
DCKEXT
XI
XO
RXD
TXD
IRRCVR0
IRRCVR1
PORTA0
PORTA1
PORTA2
PORTA3
PORTA4
PORTA5
PORTA6
PORTA7
PORTB0
PORTB1
PORTB2
PORTB3
PORTB4
PORTB5
PORTB6
PORTB7
PORTC0
PORTC1
PORTC2
PORTC3
PORTC4
PORTC5
PORTC6
PORTC7
CPUTMS
CPUTCK
CPUTDI
CPUTDO
MODE0
MODE1
MODE2
MODE3
ADR24B
RD
WR
BHEN
ROMOE
ROMWE
RAMOE
RAMWE
CS0
CS1
EXTINT
NMI
DNC1
DNC2
DNC3
A[19..1]
D[15..0]
ROMOEn
ROMWEn
A/D_DIM_SELECT1
PNL_EN
LED3
DCLK
DVS
DHS
DEN
DRE[7..0]
DGE[7..0]
DBE[7..0]
DRO[7..0]
DGO[7..0]
DBO[7..0]
RDCLK
RDVS
RDHS
RDEN
RRE0
RRE1
RRE2
RRE3
RRE4
RRE5
RRE6
RRE7
RGE0
RGE1
RGE2
RGE3
RGE4
RGE5
RGE6
RGE7
RBE0
RBE1
RBE2
RBE3
RBE4
RBE5
RBE6
RBE7
RRO0
RRO1
RRO2
RRO3
RRO4
RRO5
RRO6
RRO7
RGO0
RGO1
RGO2
RGO3
RGO4
RGO5
RGO6
RGO7
RBO0
RBO1
RBO2
RBO3
RBO4
RBO5
RBO6
RBO7
LED1_O
LED2_O
LED1
LED2
VSCL
VSDA
SCL_5V
SDA_5V
STAND_BY_2
A/D_DIM_SELECT
Q1
BC848C
SOT23
Q2
BC848C
SOT23
Q550
BC848A
SOT23
Q551
Q552
Q553
Q554
Q555
L550
22uH

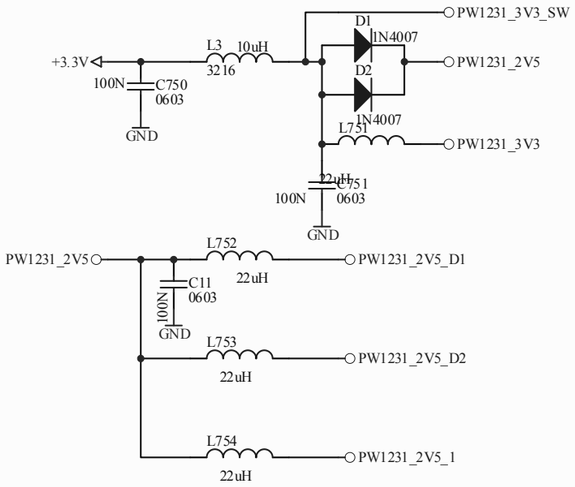
PW1231_3V3_SW
D1
1N4007
+3.3V
L3 10uH
3216
D2
PW1231_2V5
100N
C750
0603
1N4007
L751
PW1231_3V3
GND
22uH
100N
C751
0603
GND

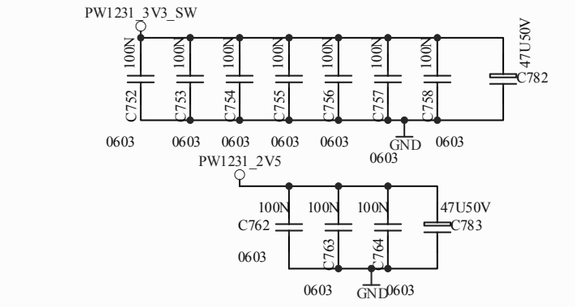
PW1231_2V5
L752
22uH
PW1231_2V5_D1
C11
0603
100N
GND
L753
PW1231_2V5_D2
22uH
L754
PW1231_2V5_1
22uH

PW1231_3V3_SW
100N
C752
100N
C753
100N
C754
100N
C755
100N
C756
100N
C757
100N
C758
47U50V
C782
0603
0603
0603
0603
0603
GND
0603
0603
PW1231_2V5
100N
C762
100N
C763
100N
C764
47U50V
C783
0603
0603
GND
0603

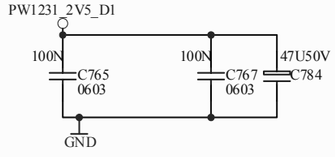
PW1231_2V5_D1
100N
C765
0603
100N
C767
0603
47U50V
C784
GND

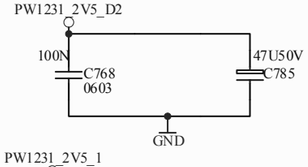
PW1231_2V5_D2
100N
C768
0603
47U50V
C785
GND

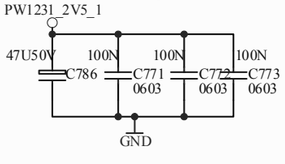
PW1231_2V5_1
47U50V
C786
100N
C771
0603
100N
C772
0603
100N
C773
0603
GND

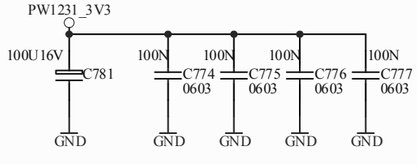
PW1231_3V3
100U16V
C781
100N
C774
0603
100N
C775
0603
100N
C776
0603
100N
C777
0603
GND
GND
GND
GND
GND

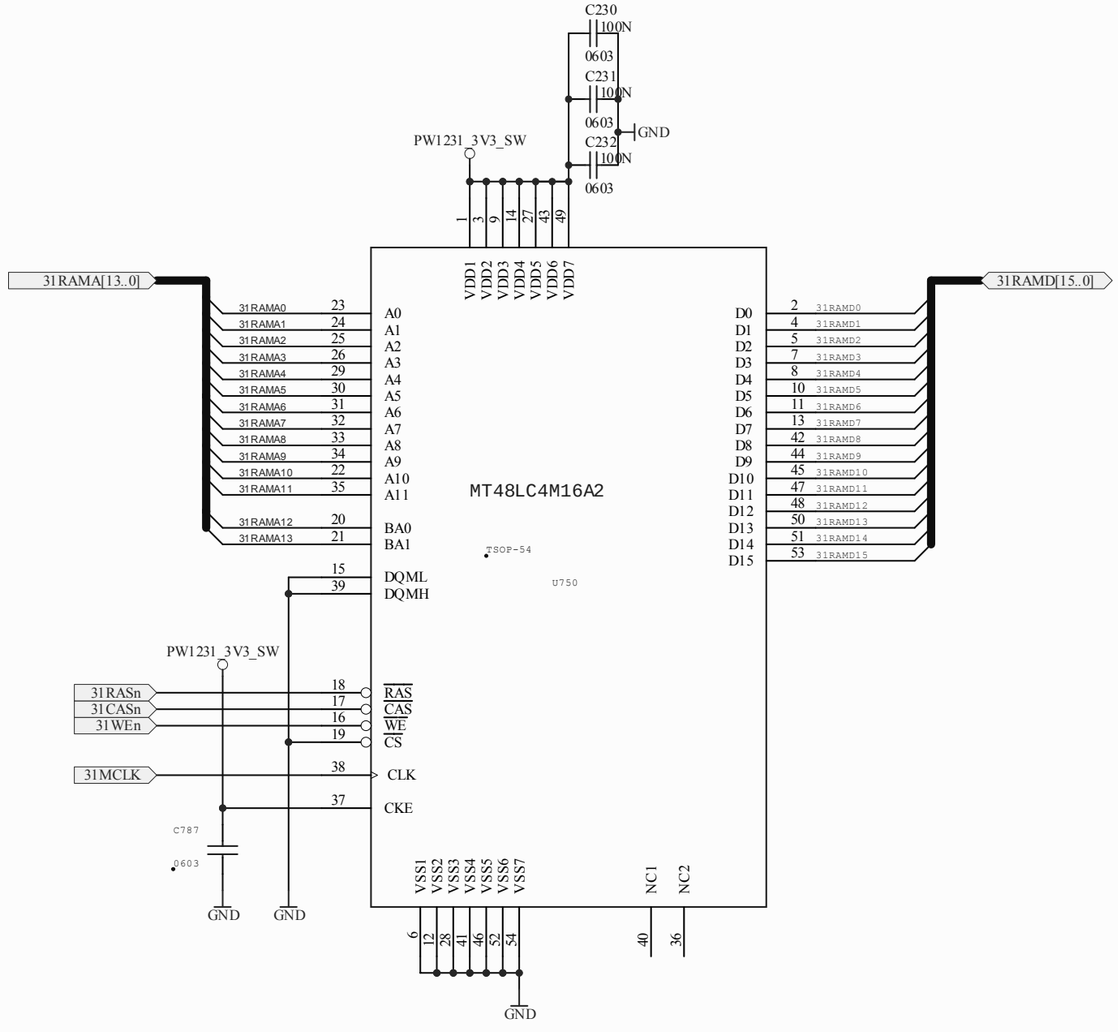
C230
100N
0603
C231
100N
0603
GND
C232
100N
0603
PW1231_3V3_SW
1
3
9
14
27
43
49
VDD1
VDD2
VDD3
VDD4
VDD5
VDD6
VDD7
31RAMA[13..0]
31RAMA0 23
31RAMA1 24
31RAMA2 25
31RAMA3 26
31RAMA4 29
31RAMA5 30
31RAMA6 31
31RAMA7 32
31RAMA8 33
31RAMA9 34
31RAMA10 22
31RAMA11 35
31RAMA12 20
31RAMA13 21
A0
A1
A2
A3
A4
A5
A6
A7
A8
A9
A10
A11
BA0
BA1
MT48LC4M16A2
TSOP-54
U750
15
39
DQML
DQMH
PW1231_3V3_SW
31RASn 18
31CASn 17
31WEn 16
19
RAS
CAS
WE
CS
31MCLK 38
CLK
37
CKE
C787
0603
GND
GND
D0 2 31RAMD0
D1 4 31RAMD1
D2 5 31RAMD2
D3 7 31RAMD3
D4 8 31RAMD4
D5 10 31RAMD5
D6 11 31RAMD6
D7 13 31RAMD7
D8 42 31RAMD8
D9 44 31RAMD9
D10 45 31RAMD10
D11 47 31RAMD11
D12 48 31RAMD12
D13 50 31RAMD13
D14 51 31RAMD14
D15 53 31RAMD15
31RAMD[15..0]
VSS1
VSS2
VSS3
VSS4
VSS5
VSS6
VSS7
6
12
28
41
46
52
54
GND
NC1
NC2
40
36

Tuner
Tuner.SCHDOC
QSS_MAIN
AM_SOUND
QSS_PIP
TELETEXT_CVBS
PIP_V
MAIN_V
+33V_IF
SCART2_CVBS_IN
SCART3_CVBS_IN
SCART1_CVBS_IN
SC1_V_OUT
SCART2_CVBS_OUT
SCART3_CVBS_OUT
+5V
+8V
SDA_5V
SCL_5V

msp
Audio.schdoc
QSS_MAIN
AM_SOUND
QSS_PIP
SDA_5V
SCL_5V
+5V
+8V
MSP_RESET
SWIN
MAIN_R
MAIN_L
SC1_AUDIO_IN_L
SC1_AUDIO_IN_R
SC3_AUDIO_IN_L
SC3_AUDIO_IN_R
SC2_AUDIO_IN_L
SC2_AUDIO_IN_R
SC3_AUDIO_OUT_L
SC3_AUDIO_OUT_R
SC2_AUDIO_OUT_L
SC2_AUDIO_OUT_R
SC1_OUT_L
SC1_OUT_R

switch
Audio_InOuts.SCHDOC
SCART2_CVBS_IN
SCART3_CVBS_IN
SCART1_CVBS_IN
SC1_V_OUT
SCART2_CVBS_OUT
SCART3_CVBS_OUT
RGB_SWITCH
KPD[3..0]
IRRCVR
LED2_O
LED1_O
SDA_5V
SCL_5V
+12V_AMP
+3.3V_STBY
+5V_STBY
+5V
AMP_SLEEP
SCART3_CHROMA
SCART_FB
SCART_BLUE
SCART_GREEN
SCART_RED
MUTE

saa7118-1
VIDECODER.schdoc
MAIN_V
SAA18PIP_VOUT
SAA18MAIN_VOUT
VVHS
VVVS
VVCLK
VUV[7..0]
VY[7..0]
VVPEN
SCART3_CHROMA
SCART_FB
SCART_BLUE
SCART_GREEN
SCART_RED
+3.3V
+5V
SCL
SDA
SA7118_3V3D1
SVHS_YIN
SVHS_CIN
VDECOE

dram 1231
SDRAM31.schdoc
+3.3V
31RAMA[13..0]
31RAMD[15..0]
31MCLK
31WEn
31CASn
31RASn
PW1231_3V3_SW
PW1231_2V5
PW1231_3V3
PW1231_2V5_D1
PW1231_2V5_D2
PW1231_2V5_1

deinterlacer
PW1231.schdoc
VVHS
VVVS
VVCLK
VUV[7..0]
VY[7..0]
VVPEN
31RAMA[13..0]
31RAMD[15..0]
31MCLK
31WEn
31CASn
31RASn
PW1231_3V3_SW
PW1231_2V5
PW1231_3V3
PW1231_2V5_D1
PW1231_2V5_D2
PW1231_2V5_1
SDA
SCL
VR[7..0]
VG[7..0]
VB[7..0]
VCLK
VVS
VHS
RESETn
VPEN

POWER
power.SCHDOC
+33V_IF
+8V
+5V
+12V_AMP
+3.3V_STBY
+5V_STBY
+3.3V
PANEL_POWER
PNL_EN
A/D_DIM_SELECT
BL_ON/OFF
DIGITAL_DIM
ANALOG_DIM
STAND_BY
STAND_BY_2

lvds
LVDSOUT.schdoc
DIGITAL_DIM_OUT
DIGITAL_DIM
PANEL_POWER
POWER_DOWN_LVDS
DCLK
DRE[7..0]
DGE[7..0]
DBE[7..0]
DHS
DVS
DEN
DRO[7..0]
DGO[7..0]
DBO[7..0]
PANEL_CONTROL

AD9887
AFE.schdoc
+5V
+3.3V
AD9887_A
SDA
SCL
GRE[7..0]
GRO[7..0]
GGO[7..0]
GBO[7..0]
ADSCDT
GFBK
GCLK
GCOAST
GBLKSPL
GHS
GVS
GPEN
RXCm
RXCp
RX0p
RX0m
RX1p
RX1m
RX2p
RX2m
GBAIN
GGAIN
GRAIN
GVSYNC
GHSYNC

Controller
PW181.schdoc
MUTE
GRE[7..0]
GRO[7..0]
GGO[7..0]
GBO[7..0]
ADSCDT
GFBK
STAND_BY_2
STAND_BY
ANALOG_DIM
DIGITAL DIM
BL_ON/OFF
A/D_DIM_SELECT
PNL_EN
GCOAST
GBLKSPL
LED1_O
LED2_O
IRRCVR
KPD[3..0]
RGB_SWITCH
MSP_RESET
SCL_3V
SDA_5V
AMP_SLEEP
POWER_DOWN_LVDS
DCLK
DRE[7..0]
DGE[7..0]
DBE[7..0]
DHS
DVS
DEN
DRO[7..0]
DGO[7..0]
DBO[7..0]
VR[7..0]
VG[7..0]
VB[7..0]
VCLK
VVS
VHS
RESETn
PANEL_CONTROL
FIELD
VPEN
GBE[7..0]
GGE[7..0]
GHS
GVS
GPEN
GCLK
GDECOE
SDA
SCL
GHSFOUT
D[15..0]
ROMOEn
ROMWEn
ADRESS20
A[19..1]
RESET
NMI
JTAGRESET

saa7118-2
GDECODER.schdoc
TELETEXT_CVBS
SAA18MAIN_VOUT
SAA18PIP_VOUT
PIP_V
SCART3_CHROMA
SVHS_CIN
SVHS_YIN
SCART_FB
SCART_BLUE
SCART_GREEN
SA7118_3V3D1
SCART_RED
GBE[7..0]
GGE[7..0]
GHS
GVS
GPEN
GCLK
GDECOE
SCL
SDA

pc-dvi
GCONNECTOR.schdoc
RXCm
RXCp
RX0p
RX0m
RX1p
RX1m
RX2p
RX2m
GBAIN
GGAIN
GRAIN
GVSYNC
GHSYNC
+5V
AD9887_A

flash - emulator
MEMORY.schdoc
D[15..0]
ROMOEn
ROMWEn
ADRESS20
A[19..1]
RESET
NMI
JTAGRESET
SCL
SDA

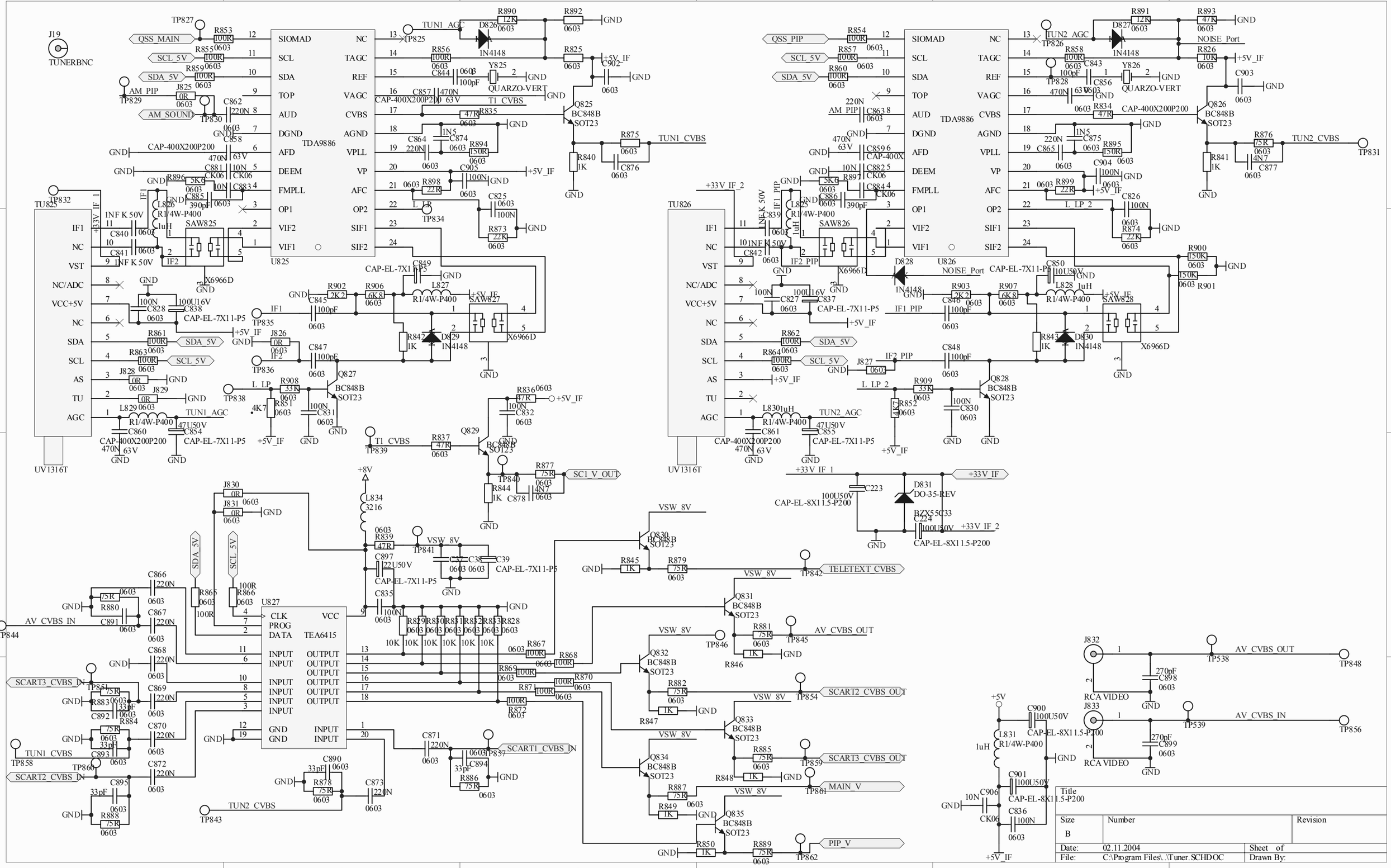

J19
TUNERBNC
TDA9886
U825
TU825
UV1316T
TDA9886
U826
TU826
UV1316T
U827
TEA6415
QSS_MAIN
SCL_5V
SDA_5V
AM_PIP
AM_SOUND
TUN1_AGC
TUN1_CVBS
TUN2_AGC
TUN2_CVBS
QSS_PIP
NOISE_Port
SAW825
SAW826
SAW827
SAW828
X6966D
IF1
IF2
IF1_PIP
IF2_PIP
L_LP
L_LP_2
SC1_V_OUT
+33V_IF
+33V_IF_1
+33V_IF_2
VSW_8V
TELETEXT_CVBS
AV_CVBS_IN
AV_CVBS_OUT
SCART3_CVBS_IN
SCART2_CVBS_IN
SCART1_CVBS_IN
SCART2_CVBS_OUT
SCART3_CVBS_OUT
MAIN_V
PIP_V
RCA VIDEO
J832
J833
Title
Size
B
Number
Revision
Date: 02.11.2004
Sheet of
File: C:\Program Files\..\Tuner.SCHDOC
Drawn By:

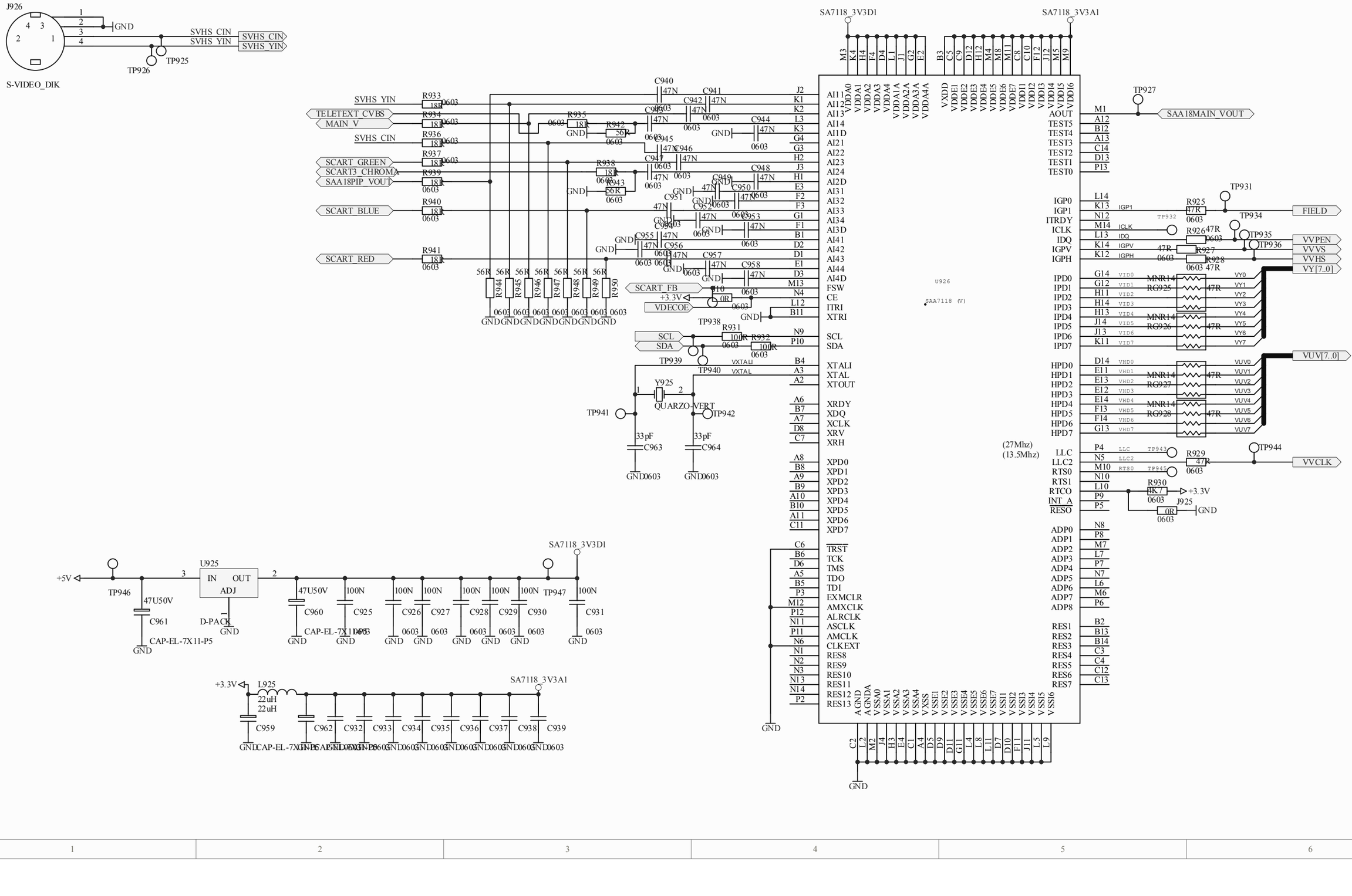
J926
S-VIDEO_DIK
GND
SVHS_CIN
SVHS_YIN
TP925
TP926
SA7118_3V3D1
SA7118_3V3A1
U926
SAA7118 (V)
TP927
SAA18MAIN_VOUT
TP931
TP932
TP934
TP935
TP936
FIELD
VVPEN
VVVS
VVHS
VY[7..0]
VUV[7..0]
TP943
TP944
VVCLK
(27Mhz)
(13.5Mhz)
R930
4K7
+3.3V
J925
0R
TP938
TP939
TP940
TP941
TP942
Y925
QUARZO-VERT
33pF
C963
C964
SCART_FB
VDECOE
SCL
SDA
VXTALI
VXTAL
SVHS_YIN
TELETEXT_CVBS
MAIN_V
SVHS_CIN
SCART_GREEN
SCART3_CHROMA
SAA18PIP_VOUT
SCART_BLUE
SCART_RED
U925
IN
OUT
ADJ
D-PACK
+5V
TP946
TP947
47U50V
C961
CAP-EL-7X11-P5
C960
C925
C926
C927
C928
C929
C930
C931
100N
L925
22uH
C959
C962
C932
C933
C934
C935
C936
C937
C938
C939